San Rafael City Schools

310 Nova Albion Way
San Rafael, CA 94903

Terra Linda High School
MODERNIZATION

320 Nova Albion Way
San Rafael, CA 94903

BID SET #1

04/13/2020

DSA A# 01-118754

2019-05785-000

GENERAL NOTES

1. THE CONSTRUCTION CONTRACT IS FOR A COMPLETE AND FULLY FUNCTIONING INSTALLATION. THESE DOCUMENTS DESCRIBE THE DESIGN INTENT AND SPECIFIC REQUIREMENTS OF THE INSTALLATION. THE CONTRACT DOCUMENTS ARE COMPLEMENTARY, AND WHAT IS REQUIRED BY ONE SHALL BE AS BINDING AS IF REQUIRED BY ALL. THESE DOCUMENTS ARE NOT MEANT TO SHOW EVERY ITEM REQUIRED TO CONSTRUCT THE WORK. ITEMS SUCH AS BUT NOT LIMITED TO, FASTENERS, CONNECTORS, FILLERS, MISCELLANEOUS CLOSURE ELEMENTS, ANCILLARY CONTROL WIRING AND POWER WHERE REQUIRED FOR THE CONTROL OR OPERATION OF THE PROVIDED EQUIPMENT, ETC. ARE NOT ALWAYS SHOWN BUT ARE CONSIDERED TO BE INCLUDED IN THE SCOPE OF THE WORK. IT IS THE RESPONSIBILITY OF THE CONTRACTOR TO PROVIDE A FULLY FUNCTIONING INSTALLATION WHICH MEETS THE DESIGN INTENT, INCLUDING THE SPECIFIC REQUIREMENTS INCLUDED IN THESE DOCUMENTS.
2. THESE DOCUMENTS DESCRIBE A SINGLE CONSTRUCTION CONTRACT. THE USE OF SUB-CONTRACTORS IS THE ELECTION OF THE GENERAL CONTRACTOR. THE DRAWINGS DO NOT INTEND TO DIVIDE THE WORK AMONG THE SUB-CONTRACTORS. WHERE THE DOCUMENTS IDENTIFY WORK WITH SUCH NOTES AS 'NOT IN MECHANICAL WORK' OR 'NOT IN ELECTRICAL WORK' OR 'SEE STRUCTURAL DRAWINGS,' IT MEANS THAT THE WORK IS NOT FURTHER DESCRIBED OR SPECIFIED ON THE DRAWING WHERE SUCH NOTES APPEAR; IT DOES NOT PRECLUDE THE CONTRACTOR FROM DELEGATING THE WORK TO THE ENTITIES OF HIS ELECTION. IN ADDITION, THE DIVISION OF THE CONTRACT DOCUMENTS INTO ARCHITECTURAL, STRUCTURAL, ELECTRICAL AND MECHANICAL OR OTHER DESIGN DISCIPLINES IS FOR CONVENIENCE ONLY, AND IS NOT INTENDED TO DIVIDE THE WORK AMONG THE CONTRACTOR'S VARIOUS SUB-CONTRACTORS NOR IMPLY THAT ALL OF THE WORK FOR A PARTICULAR TRADE IS SHOWN ONLY IN THOSE DRAWINGS OR SPECIFICATIONS.
3. REFERENCE TO "CONTRACTOR" IN THESE DOCUMENTS SHALL BE INTERPRETED AS REFERRING TO THE GENERAL CONTRACTOR OR TO ANY SUB-CONTRACTOR TO THE GENERAL CONTRACTOR, COLLECTIVELY OR AS INDIVIDUAL ENTITIES. FURTHER, REFERENCE TO A PARTICULAR SUB-CONTRACTOR IS FOR CONVENIENCE ONLY, AND IS NOT INTENDED TO LIMIT THE SCOPE OF THE WORK TO THAT TRADE OR LIMIT THE RESPONSIBILITIES OF THE GENERAL CONTRACTOR TO COORDINATE THE WORK OF ALL TRADES.
4. THE DRAWINGS AND PROJECT MANUAL ESTABLISH DETAILED MINIMUM REQUIREMENTS FOR THE DESIGN AND CONSTRUCTION OF THE PROJECT. PARTIAL OR OUTDATED SETS OF CONTRACT DOCUMENTS ARE INCOMPLETE AND SHOULD NOT BE DISTRIBUTED OR UTILIZED.
5. ALL WORK IS TO COMPLY WITH ALL GOVERNING FEDERAL, STATE AND LOCAL CODES AND REGULATIONS IN FORCE AT THE TIME OF CONSTRUCTION.
6. CONTRACTOR IS RESPONSIBLE FOR OBTAINING AND PAYING FEES FOR ALL PERMITS PRIOR TO STARTING CONSTRUCTION. PERMITS ARE TO BE POSTED IN A CONSPICUOUS PLACE ON THE PROJECT SITE AS REQUIRED BY AUTHORITY HAVING JURISDICTION.
7. UNLESS SPECIFICALLY NOTED AS BEING RE-USED, ALL MATERIALS FURNISHED AT THE JOB SITE SHALL BE NEW AND FREE FROM DEFECTS, AND SHALL BE STORED AT THE SITE IN SUCH A MANNER AS TO PROTECT THEM FROM DAMAGE. ALL WORK SHALL BE OF BEST PRACTICE OF EACH TRADE.
8. IT IS THE RESPONSIBILITY OF THE CONTRACTOR AND ALL SUB-CONTRACTORS TO REVIEW ALL DRAWINGS, PROJECT MANUAL, ADDENDA, ETC. IN ORDER TO ASSURE COORDINATION OF ALL WORK BY ALL TRADES. FAILURE TO REVIEW AND COORDINATE ALL CONTRACT DOCUMENTS BY THE GENERAL CONTRACTOR WITH THE SUB-CONTRACTORS FOR APPLICABLE PORTIONS OF THE WORK DOES NOT RELIEVE ANY PARTY FROM PERFORMING THE MATERIALS AND WORK REQUIRED FOR A COMPLETE INSTALLATION.
9. THE PROJECT MANUAL WHICH INCLUDES THE GENERAL CONDITIONS, SPECIAL CONDITIONS AND TECHNICAL SPECIFICATIONS AND THE COMPLIMENTARY DRAWINGS TOGETHER DESCRIBE THE PROJECT REQUIREMENTS. WHERE THERE ARE DISCREPANCIES BETWEEN THE PROJECT MANUAL AND THE DRAWINGS, THE CONTRACTOR SHALL ADVISE THE ARCHITECT OF SUCH AND REQUEST CLARIFICATION. IN GENERAL, THE PROJECT MANUAL TAKES PRECEDENCE OVER DRAWINGS. LARGE SCALE DETAILS TAKE PRECEDENCE OVER SMALL SCALE DETAILS.
10. IT IS THE RESPONSIBILITY OF THE CONTRACTOR TO COMPLETELY COORDINATE WORK AS REQUIRED TO MEET THE DESIGN INTENT AS DEFINED BY THE DOCUMENTS. THE CONTRACTOR SHALL LAY OUT AND SEQUENCE THE INSTALLATION OF WORK SO THAT THE DIFFERENT SYSTEMS DO NOT OBSTRUCT INSTALLATION OF SUBSEQUENT WORK. IN GENERAL, SYSTEMS INSTALLED FIRST SHOULD BE AS HIGH AND AS TIGHT TO THE STRUCTURE AS POSSIBLE TO ALLOW SPACE FOR SYSTEMS WHICH FOLLOW.
11. THE GENERAL CONTRACTOR AND ALL SUB-CONTRACTORS SHALL VISIT THE SITE PRIOR TO BIDDING IN ORDER TO FAMILIARIZE THEMSELVES WITH THE EXISTING CONDITIONS AND THE IMPACT OF THE PROPOSED WORK INDICATED ON THE DRAWINGS AND SPECIFICATIONS ON THESE CONDITIONS. ANY QUESTIONS REGARDING THE COORDINATION OF NEW WORK WITH EXISTING CONDITIONS MUST BE SUBMITTED TO THE ARCHITECT IN WRITING PRIOR TO THE BID SUBMISSION AND WITH ADEQUATE TIME FOR RESPONSE TO ALL BIDDERS. THE ARCHITECT WILL RESPOND TO TIMELY QUESTIONS WITH A WRITTEN RESPONSE TO ALL BIDDERS.
12. ALL WORK NOTED "NIC" IS NOT IN CONTRACT. CONTRACTOR SHALL COORDINATE WITH OTHER CONTRACTORS PER REQUIREMENT ESTABLISHED BY OWNER.
13. THE EXISTING DIMENSIONS AND CONDITIONS INDICATED IN THESE DOCUMENTS ARE FROM ELECTRONIC CAD INFORMATION PROVIDED BY THE OWNER AND ARE ASSUMED TO BE ACCURATE AS SHOWN. THE CONTRACTOR SHALL VERIFY THE ACCURACY OF SUCH INFORMATION PRIOR TO THE START OF CONSTRUCTION, AND ADVISE THE ARCHITECT OF ANY DEVIATIONS OR CONFLICTS WITH THE INFORMATION SHOWN ON THE DRAWINGS.
14. DRAWINGS ARE NOT TO BE SCALED. CONTRACTOR SHALL REFER TO THE DIMENSIONS INDICATED OR THE ACTUAL SIZES OF CONSTRUCTION ITEMS. WHERE NO DIMENSION OR METHODS OF DETERMINING A LOCATION EXISTS, VERIFY DIMENSION WITH ARCHITECT PRIOR TO LAYOUT AND INSTALLATION.
15. THE DRAWINGS AND REFERENCED DETAILS HAVE BEEN DIMENSIONED IN ORDER TO ESTABLISH THE CONTROL AND GUIDELINES FOR FIELD LAYOUT. WHERE DISCREPANCIES EXIST BETWEEN THE DRAWINGS AND FIELD CONDITIONS THE CONTRACTOR SHALL NOTIFY THE ARCHITECT OF SUCH PRIOR TO LAYOUT AND INSTALLATION.
16. DIMENSIONS ON DOCUMENTS ARE TO FACE OF STUDS FOR NEW CONSTRUCTION AND TO FACE OF FINISH MATERIALS FOR EXISTING CONSTRUCTION, UNLESS OTHERWISE INDICATED.
17. WHERE DIMENSIONS INDICATED ARE NOTED AS VERIFY IN FIELD (VIF) THE DIMENSION SHOWN IS THE BASIS OF DESIGN, BUT MAY DIFFER FROM ACTUAL CONDITIONS. CONTRACTOR SHALL VERIFY THESE DIMENSIONS WHILE LAYING OUT THE WORK AND REPORT ANY DISCREPANCIES TO THE ARCHITECT PRIOR TO PROCEEDING. WHERE DIMENSIONS ARE NOTED AS "+/-" FIELD DIMENSIONS MAY VARY FROM THE NOTED DIMENSIONS BY MINOR AMOUNTS. DISCREPANCIES OF MORE THAN 1" SHOULD BE BROUGHT TO THE ATTENTION OF THE ARCHITECT FOR CONFIRMATION.
18. DETAILS ARE KEYED TO THE PLANS AT TYPICAL LOCATIONS. TYPICAL DETAILS APPLY TO ALL LOCATIONS WHICH ARE SIMILAR BUT ARE NOT NECESSARILY KEYED TO EVERY LOCATION TO WHICH THEY APPLY. CONTRACTOR IS RESPONSIBLE TO COORDINATE THE LOCATION OF ALL TYPICAL DETAILS AND INSTALL THE WORK INDICATED. FEATURES NOT SHOWN IN THEIR ENTIRETY SHALL BE COMPLETELY PROVIDED AS IF SHOWN IN FULL. IF DISCREPANCIES EXIST, CONTRACTOR IS TO REQUEST CLARIFICATION BY THE ARCHITECT OF SUCH CONDITIONS.
19. FINISH FLOOR ELEVATIONS REFER TO TOP OF CONCRETE SLAB, UNLESS NOTED OTHERWISE. WHERE CONCRETE SLAB IS DEPRESSED TO ACCOMMODATE SETTING BEDS, RAISED ACCESS FLOOR, OR OTHER SIMILAR FLOOR ASSEMBLIES, FINISH FLOOR ELEVATIONS ARE TO TOP OF FINISH FLOOR ASSEMBLY INDICATED.
20. FIRE RATING "TAPES" INDICATED ON FLOOR PLANS SHOW EXTENT OF FIRE RATED PARTITIONS, BARRIERS AND FIRE WALLS. RATING IN A PARTITION SHALL BE CONTINUOUS AND SHALL CONTINUE OVER DOORS AND WINDOWS WHETHER OR NOT THEY ARE SHOWN AS SUCH ON THE PLANS. REFER TO PARTITION DETAILS FOR REQUIREMENTS OF THE RATED ASSEMBLIES.
21. VERIFY AND COORDINATE SIZES, LOCATION AND MOUNTING REQUIREMENTS OF ALL EQUIPMENT AND FIXTURES. IT IS THE CONTRACTOR'S RESPONSIBILITY TO PROVIDE REQUIRED BLOCKING, BACKING, SLEEVES, ETC. FOR A COMPLETE, NEAT INSTALLATION. COORDINATE INSTALLATION OF ALL SLEEVES AND OPENINGS AS REQUIRED THROUGH ALL EXISTING OR NEW CONSTRUCTION.
22. DETAILS INDICATE DESIGN INTENT OF WORK IN PLACE. MINOR MODIFICATIONS MAY BE REQUIRED TO SUIT JOB CONDITIONS OR DIMENSIONS AND ARE TO BE INCLUDED AS PART OF THE WORK.
23. PROVIDE PROTECTION FOR PEDESTRIANS OR USERS OF ADJACENT AREAS OF THE BUILDING AS NECESSARY AND AS REQUIRED BY THE AUTHORITY HAVING JURISDICTION.
24. MAINTAIN THE PREMISES CLEAN AND FREE OF TRASH AND DEBRIS. PROTECT PROJECT, THE SITE, AND PERSONAL PROPERTY FROM DAMAGES.
25. PROTECT WORK AREAS AND EXISTING ADJACENT AREAS, INCLUDING EXISTING UTILITIES, FROM DAMAGE. REPAIR, REPLACE, OR PATCH ANY DAMAGE DUE TO CONSTRUCTION. REPAIRED CONSTRUCTION IS SUBJECT TO REVIEW AND ACCEPTANCE BY ARCHITECT.
26. PROVIDE REQUIRED TEMPORARY UTILITIES, BRACING, SUPPORTS, SHORING, ETC. CONTRACTOR SHALL BE RESPONSIBLE FOR DESIGN ADEQUACY AND SAFETY OF ERECTION.
27. CONTRACTOR SHALL MAINTAIN CURRENT UPDATED RECORD DRAWINGS AND SPECIFICATIONS ON SITE AT ALL TIME.
28. CONTRACTOR IS RESPONSIBLE FOR MEANS AND METHODS OF CONSTRUCTION, INCLUDING BUT NOT LIMITED TO SITE SAFETY AND SECURITY FOR WORKERS AND GENERAL MEMBERS OF THE PUBLIC.
29. METAL FABRICATIONS AND SUPPORT ASSEMBLIES WHETHER SHOWN OR NOT SHALL BE PROVIDED FOR THE STRUCTURAL SUPPORT OF MISCELLANEOUS ELEMENTS. GENERAL CONTRACTOR IS RESPONSIBLE FOR PROVIDING ENGINEERED STRUCTURAL ASSEMBLIES AND CALCULATIONS SHOWING COMPLIANCE WITH CODE REQUIREMENTS AND ACCOUNTING FOR STATIC AND DYNAMIC LOADS INCLUDING ANY WIND OR SEISMIC LOADS, THERMAL MOVEMENT OF SUPPORTING STRUCTURE AND DIMENSIONAL TOLERANCES OF THE BUILDING.
30. THE CONTRACTOR SHALL PROVIDE AND INSTALL ALL STIFFENERS, BRACING, BACK-UP PLATES AND SUPPORTING BRACKETS REQUIRED FOR THE BEST POSSIBLE INSTALLATION OF ALL TOILET ROOM ACCESSORIES AND PARTITIONS AND ALL WALL MOUNTED OR SUSPENDED MECHANICAL, ELECTRICAL OR MISCELLANEOUS EQUIPMENT.
31. PIPE SLEEVES IN MECHANICAL EQUIPMENT ROOMS EXTEND 2" ABOVE THE FLOOR LINE. FILL THE ANNULAR SPACES OF PIPE SLEEVES THROUGH THE FLOOR OR THROUGH RATED WALLS WITH FIRE SAFING AND SMOKE SEAL COMPOUND AS INDICATED ON THE SPECIFICATION, AND AS APPROVED BY THE AUTHORITY HAVING JURISDICTION. PROVIDE APPROVED RATED FIRE DAMPERS FOR ALL DUCTS PENETRATING FIRE RATED WALLS. FIRE DAMPER ASSEMBLIES, INCLUDING SLEEVES AND INSTALLATION PROCEDURES MUST BE APPROVED BY THE BUILDING OFFICIAL PRIOR TO INSTALLATION. WHEREVER POSSIBLE, MANUAL RESET LEVER FOR THE FIRE DAMPER MUST BE PLACED ON NON-PUBLIC OR LAY-IN CEILING SIDE OF THE RATED WALL.
32. SIZES OF MECHANICAL EQUIPMENT PADS AND BASES SHOWN ON PLAN ARE APPROXIMATE. CONTRACTOR SHALL VERIFY DIMENSIONS OF ALL PADS AND BASES WITH THE APPROPRIATE EQUIPMENT MANUFACTURERS. CONTRACTOR SHALL COORDINATE MOUNTINGS WITH APPROPRIATE EQUIPMENT MANUFACTURERS. PADS AND BASES SHALL BE INDICATED ON SUBMITTALS AND BROUGHT TO THE ATTENTION OF THE ARCHITECT PRIOR TO LAY-OUT OF REINFORCING STEEL OR STEEL DECK.
33. PROVIDE ACCESS PANELS FOR MECHANICAL AND ELECTRICAL EQUIPMENT AS REQUIRED BY APPLICABLE CODES. ALL ACCESS PANELS IN GYP BOARD SHALL BE CONCEALED, MUD-IN TYPE. ELECTRICAL J-BOXES, PLUMBING CLEANOUTS, FIRE DAMPERS AND OTHER SIMILAR ITEMS REQUIRING ACCESS ARE NOT TO BE LOCATED ABOVE GYPSUM BOARD OR SIMILAR NON-ACCESSIBLE CEILING.
34. DSA DEFERRED SUBMITTAL DETAILS INDICATE DESIGN INTENT ONLY, FINAL DESIGN BY CONTRACTOR SUBMITTED AS PART OF DEFERRED APPROVAL DOCUMENTS

DESIGN CRITERIA

1. CODE: 2019 CALIFORNIA BUILDING CODE

2. DESIGN LIVE LOADS:
   AREA: ROOF LIVE LOAD: 20PSF REMARKS: REDUCIBLE

3. EARTHQUAKE DESIGN LOADS:
   EQUIVALENT LATERAL FORCE PROCEDURE
   SITE CLASS "D"
   Ss = 1.500 Fa=1.00 Sds=1.500 SEISMIC DESIGN CATEGORY 'D'
   Si = 0.600 Fv=1.50 Sdi=0.600 Cs=0.500
   Ie-1.25, RISK CATEGORY III
   R=2 1/2 (Special Steel Cantilever Columns)
   HORIZONTAL STRUCTURAL IRREGULARITIES:
   -NONE
   VERTICAL STRUCTURAL IRREGULARITIES:
   -NONE
   SEISMIC BASE SHEAR, V=0.500 W
   SEISMIC BASE SHEAR, V=0.650 W (WITH REDUNDANCY FACTOR = 1.3

4. WIND DESIGN LOAD
   SIMPLIFIED PROCEDURE BASIC WIND SPEED, = Vult = 115MPH, Vasd = 89MPH
   SURFACE ROUGHNESS 'C' RISK CATEGORY III
   EXPOSURE 'C'

5. DESIGN SNOW LOADS: N/A

APPLICABLE CODES

APPLICABLE CODES FOR THIS PROJECT SHALL BE:

· 2019 CALIFORNIA ADMINISTRATIVE CODE (CAC) (PART 1, TITLE 24, CCR)

· 2019 CALIFORNIA BUILDING CODE (CBC) VOLUMES 1 & 2 (PART 2, TITLE 24, CCR)
(2018 EDITION INTERNATIONAL BUILDING CODE WITH 2019 CALIFORNIA AMENDMENTS)

· 2019 CALIFORNIA ELECTRICAL CODE (CEC) (PART 3, TITLE 24, CCR)
(2017 EDITION NATIONAL ELECTRICAL CODE WITH 2019 CALIFORNIA AMENDMENTS)

· 2019 CALIFORNIA MECHANICAL CODE (CMC) (PART 4, TITLE 24, CCR)
(2018 EDITION IAPMO UNIFORM MECHANICAL CODE WITH 2019 CALIFORNIA AMENDMENTS)

· 2019 CALIFORNIA PLUMBING CODE (CPC) (PART 5, TITLE 24, CCR)
(2018 EDITION IAPMO UNIFORM PLUMBING CODE WITH 2019 CALIFORNIA AMENDMENTS)

· 2019 CALIFORNIA ENERGY CODE (PART 6, TITLE 24, CCR)
(2015 EDITION CALIFORNIA ENERGY COMMISSION BUILDING ENERGY EFFICIENCY STANDARDS)

· 2019 CALIFORNIA FIRE CODE (CFC) (PART 9, TITLE 24, CCR)
(2018 EDITION OF INTERNATIONAL FIRE CODE WITH 2019 CALIFORNIA AMENDMENTS)

· 2019 CALIFORNIA GREEN CODE (PART 11, TITLE 24, CCR)

· 2019 CALIFORNIA REFERENCE STANDARDS CODE (PART 12, TITLE 24, CCR)

REGULATIONS OF THE STATE FIRE MARSHAL (CCR TITLE 19)

NFPA 13 - AUTOMATIC FIRE SPRINKLER SYSTEMS - 2016 (CA AMENDED)
NFPA 14 STANDPIPE & HOSE SYSTEMS, 2016 (CA AMENDED)
NFPA 17 - DRY CHEMICAL EXTINGUISHING SYSTEMS, 2017
NFPA 17A - WET CHEMICAL EXTINGUISHING SYSTEMS, 2017
NFPA 20 - STATIONARY FIRE PUMPS FOR FIRE PROTECTION, 2016
NFPA 24 - PRIVATE FIRE SERVICE MAINS, 2016 (CA AMENDED)
NFPA 25 - INSPECTION, TESTING AND MAINTENANCE OF WATER BASED FIRE PROTECT. SYSTEMS, 2013
NFPA 72 - 2016 NATIONAL FIRE ALARM CODE (CA AMENDED)
NFPA 110 - EMERGENCY AND STANDBY POWER SYSTEMS, 2016
NFPA 170 - STANDARD FOR FIRE SAFETY AND EMERGENCY SYMBOLS, 2018
NFPA 221 STANDARD FOR HIGH-EXPENSE FIRE WALLS, FIRE WALLS, AND FIRE BARRIER WALLS, 2018
ICC 300 - STANDARDS ON BLEACHERS FOLDING AND TELESCOPIC SEATING, AND GRANDSTANDS 2017

· REFERENCE CODE SECTIONS FOR APPLICABLE STANDARDS
2019 CBC, CHAPTER 35
2019 CFC, CHAPTER 45

PROJECT TEAM

OWNER
SAN RAFAEL CITY SCHOOLS
310 NOVA ALBION WAY
SAN RAFAEL, CA 94903
T. 415.492.3200
E. DZAICH@SRCS.ORG

CIVIL
CLARK CIVIL ENGINEERING
P.O. BOX 131
POINT REYES STATION, CA 94956
T. 510.715.6018
E. WCLARK@CLARKCIVIL.COM

LANDSCAPE
VALLIER DESIGN ASSOCIATES, INC.
210 WASHINGTON AVENUE, SUITE G
POINT RICHMOND, CA 94801
T. 510.237.7745
E. MARCIA@VALLIERDESIGN.COM

ARCHITECT & STRUCTURAL
HARLEY ELLIS DEVEREAUX
417 MONTGOMERY STREET
SUITE 400
SAN FRANCISCO, CA 94104
T. 415.981.2345
E. SBERGE@HED.DESIGN

ELECTRICAL AND FIRE ALARM
ALLIANCE ENGINEERING CONSULTANTS
4701 PATRICK HENRY DRIVE
BUILDING 10
SANTA CLARA, CA 95054
T. 408.970.9888
E. JOVI@AEC-ENGINEERS.COM

NOTE:

THE ARCHITECT HAS NO RESPONSIBILITY FOR THE DISCOVERY, PRESENCE, HANDLING, REMOVAL OR DISPOSAL OF, OR EXPOSURE OF PERSONS TO, HAZARDOUS MATERIALS OR TOXIC SUBSTANCES IN ANY FORM AT THE PROJECT SITE, INCLUDING BUT NOT LIMITED TO ASBESTOS, ASBESTOS PRODUCTS, POLYCHLORINATED BIPHENYL (PCB), LEAD PAINT OR OTHER TOXIC SUBSTANCES. THE FACT THAT THESE DOCUMENTS DO NOT INDICATE THE PRESENCE OF OR REMOVAL OR CONTAINMENT OF THE FOREGOING IS NOT INTENDED TO INDICATE THAT THESE MATERIALS OR SUBSTANCES, AMONG OTHERS, ARE NOT PRESENT AND ARE NOT REQUIRED TO BE REMOVED OR CONTAINED IN COMPLIANCE WITH FEDERAL, STATE AND LOCAL REGULATIONS.

DSA NOTES

1. CHANGES TO THE APPROVED DRAWINGS AND SPECIFICATIONS SHALL BE MADE BY ADDENDA OR CONSTRUCTION CHANGE DOCUMENTS APPROVED BY THE DIVISION OF THE STATE ARCHITECT, AS REQUIRED BY SECTION 4-338, PART 1, TITLE 24, CCR.

2. ONE SET OF D.S.A. APPROVED PLANS SHALL BE KEPT IN A PLAN BOX AND SHALL NOT BE USED BY THE WORKMEN. ALL CONSTRUCTION SETS SHALL REFLECT THE SAME INFORMATION. THE CONTRACTOR SHALL MAINTAIN, IN GOOD CONDITION, ONE COMPLETE SET OF PLANS WITH ALL REVISIONS, ADDENDA, AND CONSTRUCTION CHANGE DOCUMENTS ON THE PREMISES AT ALL TIMES. THESE ARE TO BE UNDER THE CARE OF THE JOB SUPERINTENDENT.

3. A PROJECT INSPECTOR (CLASS 1) EMPLOYED BY THE DISTRICT (OWNER) CERTIFIED AND APPROVED BY THE DIVISION OF THE STATE ARCHITECT SHALL PROVIDE CONTINUOUS INSPECTION OF THE WORK. THE DUTIES OF THE INSPECTOR ARE DEFINED IN SECTION 4-342, PART 1, TITLE 24, CCR.

4. ALL D.S.A. FEES SHALL BE PAID FOR BY THE DISTRICT.

5. A DSA APPROVED LAB WITH A CURRENT L.E.A. APPROVAL NUMBER SHALL BE EMPLOYED AND PAID FOR BY THE DISTRICT.

6. UNLESS SPECIFIED ON STRUCTURAL DRAWINGS, ANY ALTERATIONS, OR MODIFICATIONS TO A STRUCTURAL ELEMENT BY CUTTING, DRILLING, BORING, BRACING, WELDING ETC. SHALL HAVE WRITTEN APPROVAL BY THE STRUCTURAL ENGINEER OF RECORD AND DSA PRIOR TO START OF WORK.

7. THE INTENT OF THESE DRAWINGS AND SPECIFICATIONS IS THAT THE WORK OF THE ALTERATION, REHABILITATION OR RECONSTRUCTION IS TO BE IN ACCORDANCE WITH TITLE 24, CALIFORNIA CODE OF REHABILITATION OR RECONSTRUCTION IS TO BE IN ACCORDANCE WITH TITLE 24, CALIFORNIA CODE OF CONSTRUCTION BE DISCOVERED WHICH HAS NOT BEEN COVERED BY THE CONTRACT DOCUMENTS WHEREIN THE FINISHED WORK WILL NOT COMPLY WITH TITLE 24, CALIFORNIA CODE OF REGULATIONS, A CONSTRUCTION CHANGE DOCUMENT (CCD), OR A SEPARATE SET OF PLANS AND SPECIFICATIONS, DETAILING AND SPECIFYING THE REQUIRED WORK SHALL BE SUBMITTED TO AND APPROVED BY THE OFFICE BEFORE PROCEEDING WITH THE WORK. (SECTION 4-317(C), PART 1, TITLE 24, CCR)

8. NO CHANGE OR REVISIONS SHALL BE MADE FOLLOWING WRITTEN APPROVAL WHICH AFFECTS ACCESS COMPLIANCE ITEMS UNLESS SUCH CHANGES OR REVISIONS ARE SUBMITTED TO THE DSA FOR APPROVAL

9. SUBSTITUTIONS AFFECTING DSA REGULATED ITEMS SHALL BE SUBMITTED AS A CONSTRUCTION CHANGE DOCUMENTS OR ADDENDA AND SHALL BE APPROVED BY DSA PRIOR TO FABRICATION AND INSTALLATION

10. CONSTRUCTION CHANGE DOCUMENTS MUST BE SIGNED BY THE FOLLOWINGS:
    ARCHITECT OR ENGINEER OF RECORD
    STRUCTURAL ENGINEER (WHEN APPLICABLE)
    DELEGATED PROFESSIONAL ENGINEER
    DSA

11. GRADING PLANS, DRAINAGE IMPROVEMENTS, ROAD AND ACCESS REQUIREMENTS AND ENVIRONMENTAL HEALTH CONSIDERATIONS SHALL COMPLY WITH ALL LOCAL ORDINANCES.

LOCATION MAP

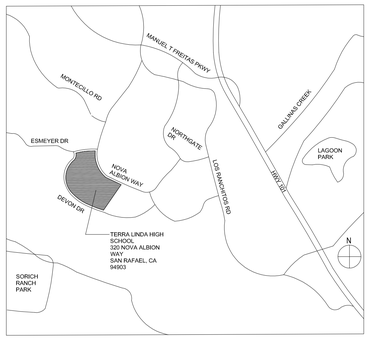

SCOPE OF WORK

BUILDING A, C, E, M, L
REMOVAL AND REPLACEMENT OF STOREFRONT WINDOWS, FINISHES, AND SITE WORK. CLASSROOM RECONFIGURATION, CEILING, AND UTILITY CAPS.
BUILDING K
GYM BLEACHERS REPLACEMENT, FINISHES

DSA DEFERRED APPROVAL SUBMITTALS

- CURTAIN WALL WINDOW SYSTEMS GREATER THAN 10 FEET SPANS
- GYM BLEACHERS

STATEMENT OF GENERAL CONFORMANCE

FOR ARCHITECTS/ENGINEERS WHO UTILIZE PLANS;
INCLUDING BUT NOT LIMITED TO SHOP DRAWINGS, PREPARED BY OTHER LICENSED DESIGN PROFESSIONALS AND/OR CONSULTANTS

(Application No. 01-118754 File No. 21-H1)

☒ The drawings or sheets listed on the cover or indexsheet (signed by other than the Architect of Record)
☐ This drawing, page of specifications/calculations

have been prepared by other design professionals or consultants who are licensed and/or authorized to prepare such drawings in this state. It has been examined by me for:

1) design intent and appears to meet the appropriate requirements of Title 24, California Code of Regulations and the project specifications prepared by me, and
2) coordination with my plans and specifications and is acceptable for incorporation into the construction of this project.

The Statement of General Conformance "shall not be construed as relieving me of my rights, duties, and responsibilities under Sections 17302 and 81138 of the Education Code and sections 4-336, 4-341 and 4-344" of title 24, part 1. (Title 24, Part 1, Section 4-317 (b))

I find that:

☐ All drawings or sheets listed on the cover or index sheet
☒ This drawing or page

☒ is/are in general conformance with the project design, and
☒ has/have been coordinated with the project plans and specifications.

Signature _____ 1-22-2020 Date

Architect or Engineer designated to be in general responsible charge

Michael J. Myers
Print Name

C-36095 3-31-2021
License Number Expiration Date

or

☐ is/are in general conformance with the project design, and
☐ has/have been coordinated with the project plans and specifications.

Signature _____ Date

Architect or Engineer delegated to be In general responsible charge

Print Name

License Number Expiration Date

SHEET INDEX

SHEET NUMBER	SHEET NAME
General	
G-000	Cover Sheet
G-001	Sheet Index and General Information
G-002	Architectural Abbreviations and Legends
G-003	Signage & Existing Restroom
G-011	Code Compliance Exiting Plan Main Bldg
G-012	Code Compliance Exiting Plan Gym
Civil	
C0.01	Title Sheet
C0.02	Grading Specifications
C1.01	Demolition Plan
C2.01	Grading and Drainage Plan
C3.01	Details
C4.01	Construction Best Management Practices (SWPP)
Landscape	
L-000	Legend and Notes
LC-101	Construction Plan
LC-501	Construction Details
LI-101	Irrigation Plan and Legend
LI-102	Planting Plan and Details
LI-501	Irrigation Details
LI-502	Irrigation Details
Architectural	
A-001	Site Plan and Code Analysis
A-004	Enlarged Site Plan & Site Details
A-005	Enlarged Site Plan & Site Details
A-101	First Floor Plan - Main Building
A-102	Second Floor Plan - Main Building
A-103	First Floor Plan & RCP - Gym
A-401	Enlarged Demolition Floor Plan & RCP
A-402	Enlarged Floor Plan & RCP
A-441	Interior Elevations
A-521	Metal Framing Details
A-522	Framing Details - Soffit Framing
A-561	Door Details
A-562	Window Details
A-571	Details Suspended Ceiling Assembly Typical
A-572	Details Suspended Ceiling Assembly Typical - Part B
A-573	Details Suspended Ceiling Assembly Metal Deck, Steel, Comp Deck
A-581	Casework Details
A-591	Miscellaneous Details
A-601	Schedules
A-602	Opening Types
A-603	Opening Types
A-604	Opening Types
Mechanical	
M-001	Notes and Legends
M400	Mechanical Demo Plans
M401	Mechanical New Plans
Plumbing	
P-001	Notes and Legend
P400	Plumbing Plans
Electrical	
E0.1	General Notes, Legend, Abbreviations Drawing Index
E0.2	Certificate of Compliance Title 24 Indoor Lighting
E0.3	Certificate of Compliance Title 24 Outdoor Lighting
E1.1	Demolition Plan Electrical
E2.1	Electrical Plan Gymnasium
E2.2	Electrical Plan Classrooms
E2.3	Electrical Site Lighting
E3.1	Schedule and Details
PC Shade Structures (A# 04-118151)	
P.C. T-1.0	P.C. Title Sheet
P.C. T-2.0	DSA 103 Forms
16.1-1000	Product Information
16.2-2000	Reactions

Sheet Count: 58

SRC
310 Nova Albion Way
San Rafael, CA 94903 415.492.3200

Terra Linda High School Modernization

310 Nova Albion Way
San Rafael, CA 94903
415.492.3200

Date	Issued For
1/17/2020	DSA Submittal
4/13/2020	BID SET #1

HED
417 Montgomery Street
Suite 400
San Francisco, California
94104 USA

(415) 981-2345

WWW.HED.DESIGN

© 2019

SHEET INDEX & GENERAL INFORMATION

G-001

ABBREVIATIONS

V		S		O		H		D		A	
V	VOLT	S	SOUTH	O2	OXYGEN	H	HYDROGEN	Δ	DIFFERENCE or DELTA	A°	ZERO / PURIFIED AIR
VA	VOLT - AMPERE	SA	SUPPLY AIR	OA	OVERALL	H&S	HUB & SPIGOT	DA	DISCHARGE AIR	A or AMP	AMPERES
VAC	VACUUM	SAN	SANITARY	O.A.	OUTSIDE AIR	H.B.	HOSE BIBB	D.A.	DOUBLE ACTING	ABR	ABRASIVE
VAR	VARIABLE	SAT	SATURATION	OBS	OBSCURE	HBD	HARDBOARD	DAT	DISCHARGE AIR TEMPERATURE	ABS	ABSOLUTE
VAV	VARIABLE AIR VOLUME	S.B.	SHOWER BENCH	O.C.	ON CENTER	H.C.	HOLLOW CORE	DB	DECIBEL	A/C	AIR CONDITIONING
VB	VINYL BASE	S.C.	SOLID CORE	O.D.	OUTSIDE DIAMETER	HD	HEAD	DBL	DOUBLE	AC	ALTERNATING CURRENT
V.BARR	VAPOR BARRIER	SC	SHADING COEFFICIENT	O.F.	OUTSIDE FACE	HDR	HEADER	DC	DIRECT CURRENT	ACB	AIR CIRCUIT BREAKER
V.C.O.	VACUUM CLEANER OUTLET	S.C.D.	SEE CIVIL DRAWINGS	O.F.C.I.	OWNER FURNISHED, CONTRACTOR	HDWD	HARDWOOD	DDC	DIRECT DIGITAL CONTROL	ACC	ACCESS, ACCESSIBLE
VCP	VITRIFIED CLAY PIPE	S.C.DISP.	SEAT COVER DISPENSER		INSTALLED	HDWR	HARDWARE	DEG	DEGREE	ACFM	CUBIC FEET PER MINUTE (ACTUAL
V.C.T	VINYL COMPOSITION TILE	SCFM, CFM	STANDARD CONDITIONS	O.F.O.I.	OWNER FURNISHED,	He	HELIUM	DEMO	DEMOLISH, DEMOLITION		CONDITIONS)
VEL	VELOCITY	SCFS	CUBIC FT PER SEC, STANDARD		OWNER INSTALLED	HG	MERCURY	DENS	DENSITY	ACI	AMERICAN CONCRETE INSTITUTE
VENT	VENTILATE, VENTILATED,	SCH	SCHEDULE	O.H.	OPPOSITE HAND	HG	HEAT GAIN	DEPT	DEPARTMENT	ACST	ACOUSTIC, ACOUSTICAL
	VENTILATION	SCN	SCREEN	OH	OVERHEAD	HGR	HANGER	DET	DETAIL	ACT	ACOUSTIC CEILING TILE
VERT	VERTICAL, VERTICALLY	S.C.R.	SHOWER CURTAIN ROD	O.O	OUT TO OUT	HGT	HEIGHT	D.F.	DRINKING FOUNTAIN	AD	AREA DRAIN
VEST	VESTIBULE	SD	STORM DRAIN	OPG,	OPNG OPENING	HH	HAND HOLE	DG	DECORATIVE GLASS	A.D.	ACCESS DOOR
VFD	VARIABLE FREQUENCY DRIVE	S.DR.	SHOWER DRAIN	OPP	OPPOSITE	HID	HIGH INTENSITY DISCHARGE	DI	DEIONIZED WATER	ADDNL	ADDITIONAL
VFR	VOLUMETRIC FLOW RATE	SEC	SECOND, SECONDARY	ORIG	ORIGINAL	H.M.	HOLLOW METAL	DIA/Φ	DIAMETER	ADJ	ADJACENT, ADJUSTABLE
VIB	VIBRATION	SECT	SECTION	OS&Y	OUTSIDE STEM & YOKE	HDCP	HANDICAPPED	DIAG	DIAGONAL	ADP	APPARATUS DEW POINT
V.I.F.	VERIFY IN FIELD	S.E.D.	SEE ELECTRICAL DRAWINGS	OSHPD	OFFICE OF STATEWIDE HEALTH PLANNING	HOA	HAND-OFF-AUTOMATIC	DIM	DIMENSION	A/E	ARCHITECT/ENGINEER
VISC	VISCOSITY	SF	SQUARE FEET (FOOT)		AND DEVELOPMENT	HORIZ	HORIZONTAL, HORIZONTALLY	DIR RADN	DIRECT RADIATION	AF	AMPERE FRAME (Breaker Rating)
VIT	VITREOUS	S.F.	SUPPLY FAN	OZ	OUNCE	HOSP	HOSPITAL	DISC	DISCONNECT	A.F.F.	ABOVE FINISHED FLOOR
VL	VERIFY LOCATION	S.F.S.D.	SEE FOOD SERVICE DRAWINGS			HP	HORSE POWER	DISCH	DISCHARGE	AFG	ABOVE FINISHED GRADE
VOL	VOLUME	SG	SPECIFIC GRAVITY	P		H.P.	HIGH POINT	DISP	DISPENSER, DISPOSAL	AFS	ABOVE FINISH(ED) SURFACE
V.R.S.	VINYL REDUCER STRIP	SGFT	STRUCTURAL GLAZED FACING TILE	P	POLE or PHASE	HPS	HIGH-PRESSURE STEAM	DIV	DIVIDER, DIVISION	AGG	AGGREGATE
VS	VERSUS	SGL	SINGLE	PA	PUBLIC ADDRESS	HR	HANDRAIL	DL	DEAD LOAD	AHU	AIR HANDLING UNIT
VT	VINYL TILE	SH	SENSIBLE HEAT	PASS	PASSAGE, PASSENGER	HR D.	HAIR DRYER	DMT	DEMOUNTABLE	AIC	AMPERE INTERRUPTING RATING
VTR	VENT THROUGH ROOF	SHG	SENSIBLE HEAT GAIN	P.B.	PUSH BUTTON	HS	HIGH STRENGTH	DN	DOWN		(Capacity)
V.V.B.	VARIABLE AIR VOLUME BOX	SHR	SENSIBLE HEAT RATIO	P.BD.	PARTICLE BOARD	HTG	HEATING	D.O.	DOOR OPENING	AISC	AMERICAN INSTITUTE OF STEEL
VWC	VINYL WALL COVERING	SHT	SHEET	P/C	PRECAST	HTHW	HIGH-TEMPERATURE HOT WATER	DP	DOOR PROTECTION		CONSTRUCTION
		SHTG	SHEATHING	PCF	POUNDS PER CUBIC FOOT	HTR	HEATER	DPDT	DOUBLE POLE, DOUBLE THROW	ALT	ALTERNATE
W		SHWR	SHOWER	PCT	PERCENT	HV	HIGH VOLTAGE	DPS	DIFFERENTIAL PRESSURE SWITCH	ALUM	ALUMINUM
W	WATT	S.I.	SQUARE INCH	PD	PRESSURE DROP or DIFFERENCE	H&V	HEATING AND VENTILATION	DPT	DEW POINT TEMPERATURE	AMB	AMBIENT
W/	WITH	SIM	SIMILAR	PDP	POWER DISTRIBUTION PANEL	HVAC	HEATING/VENTILATING/AIR	D.R.	DINING ROOM	AMP	AMPERE
WB	WET BULB	SK	SINK	PED	PEDESTAL		CONDITIONING	DR	DOOR	AMT	AMOUNT
WBT	WET-BULB TEMPERATURE	SL	SEA LEVEL	PEN	PENETRATION	HVC	HIGH LAB VACUUM	DRN	DRAIN	ANCH	ANCHOR
W.C.	WATER CLOSET	S.L.D.	SEE LANDSCAPE DRAWINGS	PERP	PERPENDICULAR	H.V.C.	HOSE VALVE CABINET	DS	DOWNSPOUT	ANG	ANGLE
WD	WOOD	S.M.D.	SEE MECHANICAL DRAWINGS	PF	POWER FACTOR	HW	HOT WATER	DSA	DIVISION/DEPARTMENT OF THE	ANOD	ANODIZED
W.F.	WASH FOUNTAIN	S.N.P.	SANITARY NAPKIN DISPOSAL	pH	HYDROGEN-ION CONCENTRATION	HWR	HOW WATER RETURN		STATE ARCHITECT	ANSI	AMERICAN NATIONAL STANDARDS
W.GL	WIRE GLASS	S.N.V.	SANITARY NAPKIN VENDOR	PH	PHASE or Φ	HWY	HIGHWAY	DSW	DOOR SWITCH		INSTITUTE
WH	WATER HEATER	SOL	SOLAR	PHOTO	PHOTOGRAPH	HYD	HYDRANT, HYDRAULIC	DT	DRAIN TILE	APPROX	APPROXIMATE, APPROXIMATELY
WHR	WALL HYDRANT	SP	SPRINKLER PIPING	PIV	POST INDICATOR VALVE	HZ	HERTZ	D.T.C.	DRAIN TILE CONNECTOR	APT	APARTMENT
W.I.	WROUGHT IRON	SP HT	SPECIFIC HEAT	PKG	PARKING			DUP	DUPLEX	Ar	ARGON
WL	WATER LEVEL	SP VOL	SPECIFIC VOLUME	PL	PLASTIC LAMINATE	I		DW	DISHWASHER	AR	ANCHOR ROD
W.L.	WORKING LINE	SPEC	SPECIFICATIONS	PLAS	PLASTIC	IAM	INDIVIDUAL ADDRESSABLE MODULE	DWG	DRAWING	ARCH	ARCHITECT, ARCHITECTURAL
W.M.	WIRE MESH	S.P.D.	SEE PLUMBING DRAWINGS	PLAT	PLATFORM	ID	INSIDE DIAMETER	DWL	DOWEL	AS	AMP SWITCH
W.O.	WHERE OCCURS	SPF	SOLID POLYMER FABRICATIONS	PLBG	PLUMBING	I.E.	INVERT ELEVATION	DWR	DRAWER	ASPH	ASPHALT
W/O	WITHOUT	SPKLR	SPRINKLER	PLF	POUNDS PER LINEAL FOOT	I.F.	INSIDE FACE	DWV	DRAIN, WASTE & VENT	ASR	AUTOMATIC SPRINKLER RISER
WP	WALL PROTECTION	SPKR	SPEAKER	PLYWD	PLYWOOD	IG	ISOLATED GROUND			ASTM	AMERICAN SOCIETY FOR TESTING
W.P.	WATERPROOFING	SPLY	SUPPLY	PNL	PANEL	IN	INCH, INCHES	E			MATERIAL
W.R.	WASTE RECEPTACLE	SPRYD	SPRAYED	PNT	PAINT	INCAND	INCANDESCENT	E	EAST	ASSY	ASSEMBLY
WS	WATER STOP	SQ	SQUARE	POL	POLISH	INCIN	INCINERATOR	EA	EACH	AT	AMPERE TRIP (Breaker Rating)
WT	WEIGHT	S.R.	SOUND RETARDANT	PORT	PORTABLE	INFO	INFORMATION	EAT	ENTERING AIR TEMPERATURE	ATM	ATMOSPHERE
WTR	WATER	S.S.D.	SEE STRUCTURAL DRAWINGS	PP	POWER PANEL	INLK	INTERLOCK	EC	ELECTRICAL CONTRACTOR	ATS	AUTO TRANSFER SWITCH
WW	WALL TO WALL	SSF	SAYBOLT SECONDS FUROL	PPM	PARTS PER MILLION	INSUL	INSULATE, INSULATION	EDR	EQUIVALENT DIRECT RADIATION	AUTO	AUTOMATIC
W.V.	WALL VENT	S.S.H.	SIDEWALL FIRE SPRINKLER HEAD	PR	PAIR	INT	INTERIOR	E/E	END TO END	AUX	AUXILIARY
W&V	WASTE & VENT	SS	SOILD SURFACE	PREFAB	PREFABRICATED	INTER	INTERMEDIATE	E.F.	EXHAUST FAN	AV	ACID RESISTANT VENT
WWC	WOOD WALL COVERING	S.S.	STAINLESS STEEL	PREFIN	PREFINISHED)	INV	INVERT	EFF	EFFICIENCY	AVG	AVERAGE
WWF	WELDED WIRE FABRIC	SSU	SAYBOLT SECONDS UNIVERSAL	PRI	PRIMARY	IPS	IRON PIPE SIZE	EG	EXHAUST GRILLE	AW	ACID RESISTANT WASTE
WWM	WELDED WIRE MESH	ST	STORM	PROJ	PROJECT, PROJECTION	ISC	AVAILABLE SHORT CIRCUIT CURRENT	E.J.	EXPANSION JOINT	AWG	AMERICAN WIRE GAUGE
		S.T.	SOUND TRAP	PROP	PROPERTY, PROPOSED	ISOL	ISOLATION, ISOLATE	EF	EACH FACE		
XYZ		STA	STATION	PRV	PRESSURE REDUCING VALVE,			EL	ELEVATION (GRADE)	B	
XH	EXTRA-HEAVY CAST IRON SOIL PIPE	STAG	STAGGERED		PRESSURE RELIEF VALVE	J		ELEC	ELECTRIC, ELECTRICAL	B&S	BELL & SPIGOT
Y	WYE	S.T.C.	SOUND TRANSMISSION CLASS	PSF	POUNDS PER SQUARE FOOT	JB	JUNCTION BOX	ELEV	ELEVATOR	B/B	BACK TO BACK
YD	YARD	STD	STANDARD	PSFA	PSF ABSOLUTE	J.C.	JANITOR CLOSET	EM	EMERGENCY	B/C	BACK OF CURB
YR	YEAR	STIFF	STIFFENER	PSGF	PSF GAGE	JCT	JUNCTION	EMBED	EMBEDMENT	BC	BOTTOM CHORD
Z	IMPEDANCE	STL	STEEL	PSI	POUNDS PER SQUARE INCH	JST	JOIST	EMT	ELECTRIC METALLIC TUBING	BD	BOARD
ZC	ZINC-COATED	STM	STEAM	PSIA	PSI ABSOLUTE	JT	JOINT	ENCL	ENCLOSURE	BETW	BETWEEN
		STOR	STORAGE	PSIG	PSI GAGE			ENT	ENTERING	BEV	BEVEL, BEVELED
SYMBOLS		STRUC	STRUCTURAL	PT	PAINT	K		E.O.L.	END OF LINE	B.E.	BOTTOM ELEVATION
CL	CENTERLINE	SUB	SUBSTATION	PT.	POINT	k	KIPS (UNFACTORED)	EP	ELECTRIC OPERATED PNEUMATIC	B.E.J.	BRICK EXPANSION JOINT
Φ	DIAMETER	SUBST	SUBSTITUTE	P.T.O.	PRESENT TO OWNER	K	KIP (1000 LB.)		SWITCH	B.F.	BARRIER FREE
Δ	DIFFERENCE or DELTA	SUCT	SUCTION	PTD	PAINTED	KCMIL	1000 CIRCULAR MILS	EPNL	ELECTRICAL PANEL	BHP	BRAKE HORSEPOWER
Ø	PHASE	SUM	SUMMER, SUMMARY, SUMMATION	PVC	PVC EDGEBANDING	K.D.	KNOCKDOWN	EQ	EQUAL	BIT	BITUMINOUS
%	PERCENT	SUPP	SUPPORT	PVMT	PAVEMENT	KIP FT	THOUSAND FOOT POUNDS	EQIV FT	EQUIVALENT FEET	BKBD	BACKBOARD
PL	PROPERTY LINE	SURD	SURFACE, DRY	PWR	POWER	KIT	KITCHEN	EQIV IN	EQUIVALENT INCHES	BKGD	BACKGROUND
ΔT	TEMPERATURE DIFFERENCE	SURF	SURFACE, SURFACING			K.O.P.	KNOCK OUT PANELS	EQUIP	EQUIPMENT	BKR	BREAKER
α	THERMAL EXPANSION COEFFICIENT	SURW	SURFACE, WET	Q		K.P.	KICK PLATE	ER	EXHAUST REGISTER	B.L.	BUILDING LINE
**	PLUS/MINUS	SUSP	SUSPEND, SUSPENSION	QT	QUARRY TILE	KVA	KILOVOLT	ES	EMERGENCY SHOWER	BLDG	BUILDING
***	SQUARE FEET	SW	SWITCH	Q.T.	QUARRY TILE	KVA	KILOVOLT AMPERES	E.S.R.	ELASTOMERIC SHEET ROOFING	BLKG	BLOCKING
#	POUND	S.W.	SIDEWALK	QTB	QUARRY TILE BASE	KVAR	KILOVOLT AMPERES REACTIVE	ESTR	ELECTRIC STRIKE	BM	BEAM, BENCH MARK
****	FLAT OVAL SIZE	SWBD	SWITCHBOARD	QTR	QUARTER	KW	KILOWATT	ET	EFFECTIVE TEMPERATURE	BOF	BOTTOM OF FOUNDATION
		SWGR	SWITCHGEAR	QTY	QUANTITY	KWH	KILOWATT HOURS	EUH	ELECTRIC UNIT HEATER	BP	BOILING POINT
STEEL SHAPES		SYM	SYMBOL	QUAD	QUADRUPLEX			EVAP	EVAPORATE	B.O.D.	BOTTOM OF DUCT
C	CHANNEL	SYS	SYSTEM	QUAL	QUALITY	L		EW	EMERGENCY EYE WASH	B.O.P.	BOTTOM OF PIPE
HP	HP SHAPES					LA	LAB AIR (15 psi)	EWC	ELECTRIC WATER COOLER	B.O.S.	BOTTOM OF STEEL
L	ANGLE	T		R		LAB	LABORATORY	EWT	ENTERING WATER TEMPERATURE	BOT	BOTTOM
M	M SHAPES	α	THERMAL EXPANSION COEFFICIENT &	R	RADIUS	LAM	LAMINATE, LAMINATED	EXC	EXCAVATED	B.R.	BEDROOM
MC	MISCELLANEOUS CHANNEL		ABSORPTION COEFFICIENT	R°	RANKINE	LAT	LEAVING AIR TEMPERATURE	EXH	EXHAUST	BRCG	BRACING
PL	PLATE	ΔT	TEMPERATURE DIFFERENCE	R12/R22	RETURN AIR	LAV	LAVATORY	EXIST	EXIST	BRG	BEARING
S	S SHAPES	t	THICKNESS	RAD	RADIATE, RADIATOR	L.B.	LAG BOLT	EXP	EXPOSED STRUCTURE / FINISH	BRKT	BRACKET
TS	STRUCTURAL TUBE OR TUBE SHAPE	T	TEE	RAD.	RADIUS	LBL	LABEL	EXP ANCH	EXPANSION ANCHOR	BS	BOTH SIDES
W	WIDE FLANGE	T.ACC	TOILET ACCESSORIES	RADN	RADIATION	LBS	POUNDS	EXP BOLT	EXPANSION BOLT	BSMT	BASEMENT
		TAB	TABULATE, TABULATION	RB	RUBBER BASE	LCL	LONG CONTINUOUS LOAD	EXT	EXTERIOR	BTU	BRITISH THERMAL UNIT
		TAP	TAP, TAPPED	RC	RAIN CONDUCTOR	L.D.	LINEAR DIFFUSER			BTUH	BRITISH THERMAL UNIT PER HOUR
		TAU	TRANSMISSIVITY	RCP	REINFORCED CONCRETE PIPE	LEV	LEVEL	F		B.U.R.	BUILT-UP ROOFING
		T&B	TOP & BOTTOM	RCVR	RECEIVER	L.F.	LINEAR FEET, FOOT	°F	degree FAHRENHEIT	BW	BOTH WAYS
		T&G	TONGUE & GROOVE	RD	ROAD	LG	LONG	F	FUSE		
		T.B.	TACK BOARD, TOWEL BAR	R.D.	ROOF DRAIN	LH	LATENT HEAT	FA	FACE AREA	C	
		TC	TOP CHORD	REC	RECESS	L.H.	LEFT HAND	F.A.	FIRE ALARM	°C	degree CELSIUS
		T/CONC	TOP OF CONCRETE	RECIRC	RECIRCULATE	LHG	LATENT HEAT GAIN	FAB	FABRICATE	CA	COMPRESSED AIR
		Tdb or TDB	DRY BULB TEMPERATURE	RECPT	RECEPTACLE	L.H.R.B.	LEFT HAND REVERSE BEVEL	FACP	FIRE ALARM CONTROL PANEL	CANT	CANTILEVER
		T.D.	TOWEL DISPENSER	RECT	RECTANGLE, RECTANGULAR	LIQ	LIQUID	FAS	FASTENER	CAT	CATALOG
		T.D.R.	TOWEL DISPENSER & RECEPTACLE	RECV	RECEIVE, RECEIVING	LL	LIVE LOAD	FBO	FURNISHED BY OTHERS	CAP	CAPACITY, CAPACITOR
		T.E.	TOP ELEVATION	RED	REDUCER	LLH	LONG LEG HORIZONTAL	F.C.U.	FAN COIL UNIT	CATV	CABLE TELEVISION
		TEL	TELEPHONE	REF	REFER, REFERENCE	LLV	LONG LEG VERTICAL	FD	FLOOR DRAIN	CB	CATCH BASIN (CIVIL DWGS ONLY)
		TEMP	TEMPERATURE	REFL	REFLECT, REFLECTIVE	LLP	LONG LEG PROJECTING	FDC	FIRE DEPARTMENT CONNECTION	CB	CIRCUIT BREAKER (ELECTRICAL
		TEMP GL	TEMPERED GLASS	REFRIDG	REFRIGERATOR	LN	LOGARITHM (NATURAL)	FDN	FOUNDATION		DWGS ONLY)
		TERM	TERMINAL	REG	REGISTER	LN2	LIQUID NITROGEN	FDR	FEEDER	CBC	CALIFORNIA BUILDING CODE
		TERR	TERRAZZO	REINF	REINFORCE, REINFORCING,	L.O.	LOUVER OPENING	F.E.	FIRE EXTINGUISHER	CBU	CEMENTINTIOUS BACKER UNIT
		TG	TRANSFER GRILLE		REINFORCEMENT	LOG	LOGARITHM TO BASE 10	F.E.B.	FIRE EXTINGUISHER AND BRACKET	C/C	CENTER TO CENTER
		THD	THREAD, THREADED	REL	RELAY	LP	LOW POINT	F.E.C.	FIRE EXTINGUISHER CABINET	CC	CUBICLE CURTAIN
		THK	THICK, THICKNESS	REM	REMOVABLE, REMOVE	L.P.	LIGHTING PANEL	FF	FLASH FACING	C.C.T.	CUBICLE CURTAIN TRACK
		THRU	THROUGH	REQD	REQUIRED	LPRF	LIGHTPROOF	F.F.	FINISH FLOOR	CCTV	CLOSED CIRCUIT TELEVISION
		TL	TWIST LOCK	RES	RESISTANCE, RESISTIVITY	LPS	LOW-PRESSURE STEAM	F/F	FACE TO FACE	CCW	COUNTERCLOCKWISE
		TOC	TOP OF CURB	RESIL	RESILIENT	LS	LONG SWEEP	F.G.	FINISH GRADE	C.D.	CUP DISPENSER
		T.O.CONC	TOP OF CONCRETE	RET	RETAINING	LSW	LIMIT SWITCH	F.H.	FIRE HYDRANT	CEM	CEMENT
		T.O.D.	TOP OF DUCT	REV	REVENT	LTG	LIGHTING	FH	FIRE HOSE	CER.T.	CERAMIC TILE
		TOF	TOP OF FOOTING	RF	RESILIENT FLOORING	LTHW	LOW-TEMP HOT WATER	F.H.C.	FIRE HOSE CABINET	CERT	CERTIFIED
		T.O.F.	TOP OF FOUNDATION	RGS	RIGID GALVANIZED STEEL	LTWT	LIGHTWEIGHT	F.H.CL	FIRE HOSE CLOSET	CFM	CUBIC FEET PER MINUTE
		TOIL	TOILET	R.H.	RIGHT HAND	LV	LAB VENT (SEE AV)	F.H.R.	FIRE HOSE RACK	C.G.	CORNER GUARD
		TOM	TOP OF MASONRY	RH %	RELATIVE HUMIDITY	LVR	LOUVER	FIG	FIGURE	CHAM	CHAMFER
		TONS	TONS OF REFRIGERATION	RHMS	ROUND HEAD METAL SCREW	LVTR	LAB VENT THRU ROOF	FIN	FINISH, FINISHED	CHAN	CHANNEL
		T.O.P.	TOP OF PIPE	RHWS	ROUND HEAD WOOD SCREW	LW	LAB WASTE (SEE AW)	FITG	FITTING	CHBD	CHALKBOARD
		T.O.R.	TOP OF RIM, TOP OF RISER	R.H.R.B	RIGHT HAND REVERSE BEVEL	LWT	LEAVING WATER TEMPERATURE	FIX	FIXTURE	CHKD/PL	CHECKERED PLATE
		TOS	TOP OF STEEL	RL	ROOF LEADER, RAIN LEADER			FLA	FULL LOAD AMPERES	CIR	CIRCLE, CIRCULAR
		T.O.W.	TOP OF WALL	RM	ROOM	M		FLEX	FLEXIBLE LIQUID TIGHT CONDUIT	CIRCUM	CIRCUMFERENCE
		TP	TOILET PARTITION	RND	ROUND	MA	MEDICAL AIR	FLG	FLANGE	CISP	CAST IRON SOIL PIPE
		T.P.H.	TOILET PAPER HOLDER	R.O.	ROUGH OPENING	MAINT	MAINTENANCE	FLR	FLOOR	CJ	CONSTRUCTION OR CONTROL JOINT
		TOT HT	TOTAL HEAT	R.O.W.	RIGHT OF WAY	MAS	MASONRY	FLUOR	FLUORESCENT	CKT	CIRCUIT
		TR	TREAD	RP	RECEPTACLE PANEL	MATL	MATERIAL	FN	FENCE	CL	CENTERLINE
		TRAN	TRANSOM	RPM	REVOLUTIONS PER MINUTE	MAX	MAXIMUM	FOC	FACE OF CONCRETE	CLG	CEILING
		TRANSF	TRANSFORMER	RPNL	RADIANT PANEL	M.B.	MARKER BOARD, MACHINE BOLT	FOF	FACE OF FINISH	CLG LOAD	COOLING LOAD
		TS	TAMPER SWITCH	RPS	REVOLUTIONS PER SECOND	MCB	MAIN CIRCUIT BREAKER	FOL	FACE OF CONCRETE	CLL	CONTRACT LIMIT LINE
		T'STAT	THERMOSTAT	R.R.	RAILROAD	MCC	MOTOR CONTROL CENTER	FOM	FACE OF MASONRY	CLR	CLEAR, CLEARANCE
		T.TD.	TOILET TISSUE DISPENSER	RR	RETURN REGISTER	MCF	THOUSAND CUBIC FEET	FOS	FACE OF STUDS	CLRM	CLASSROOM
		TV	TELEVISION	RST	RESILIENT STAIR TREAD	MCM	THOUSAND CIRCULAR MILS	FOSH	FACE OF SHEATHING	CMPR	COMPRESSOR
		Twb or TWB	WET BULB TEMPERATURE	R.S.	ROOF SUMP	MECH	MECHANICAL	FP	FREEZING POINT	CMU	CONCRETE MASONRY UNIT(S)
		TYP	TYPICAL	RT	RUBBER TILE	MEMBR	MEMBRANE	FPM	FEET PER MINUTE	CNTR	COUNTER
				R.T.	RESILIENT TILE	MET	METAL, METALLIC	FPS	FEET PER SECOND	CO	CARBON MONOXIDE
		U		R-VALUE	THERMAL RESISTANCE (R-FACTOR)	MEZZ	MEZZANINE	FR	FRAME	C.O.	CLEAN OUT
		U	U-FACTOR	RVT	RIVET	MFR	MANUFACTURER	F.R.	FIRE RETARDANT (RATE)	CO2	CARBON DIOXIDE
		U/G	UNDERGROUND	RWC	RIGID WALL COVERING	MH	MANHOLE	FRL	FIBER REINFORCED LAMINATE	COEF	COEFFICIENT
		U.H.	UNIT HEATER			M.I.	MISCELLANEOUS IRON	FRMG	FRAMING	COL	COLUMN
		UL	UNDERWRITER'S LABORATORIES, INC			MIN	MINIMUM	FRZR	FREEZER FULL SIZE	COMB	COMBINATION
		U.O.N.	UNLESS OTHERWISE NOTED			MIR	MIRROR	FS	FINISH SWITCH	COMPO	COMPOSITION
		UPS	UNINTERRUPTIBLE POWER SUPPLY			MISC	MISCELLANEOUS	FSP	FIRE STANDPIPE	CONC	CONCRETE
		UR	URINAL			MLDG	MOLDING	FSW	FLUSH SWITCH	CONC/S	CONCRETE SEALED
		U-VALUE	HEAT TRANSMITTANCE COEFFICIENT			MLO	MAIN LUGS ONLY	FT	FEET, FOOT	COND	CONDITION
						M.O.	MASONRY OPENING	FT LB	FOOT POUND	CONF	CONFERENCE
						MPH	MILES PER HOUR	F.T.D.	FACIAL TISSUE DISPENSER	CONN	CONNECT, CONNECTION
						MPS	MEDIUM-PRESSURE STEAM	F.T.F.	FLOOR-TO-FLOOR	CONST	CONSTRUCTION
						MSP	MOTOR STARTER PANEL	FTG	FOOTING	CONT	CONTINUOUS
						MTD	MOUNTED, MOUNTING	F.T.R.	FINNED TUBE RADIATION	CONTR	CONTRACTOR
						MTG	MEETING	F.U.	FIXTURE UNIT	CONV	CONVECTOR
						MTHW	MEDIUM-TEMP HOT WATER	FURN	FURNISH, FURNISHED	CORR	CORRIDOR
						MTL	METAL	FURR	FURRED, FURRING	COV	COVER
						MTR	MOTOR	FLAT	OVAL DIMENSION	CP	CONDENSATE PUMP
						MUAU	MAKE UP AIR UNIT	FVC	FIRE VALVE CABINET	CPT	CARPET
										CR	CRASH RAIL
						N		G		CRS	COURSE, COURSES
						N	NEW	G	GAS (NATURAL)	CSMT	CASEMENT
						N2	NITROGEN	GA	GAUGE	CT	CERAMIC TILE
						N2O	NITROUS OXIDE	GAL	GALLON	CTB	CERAMIC TILE BASE
						N/A	NOT APPLICABLE	GALV	GALVANIZED	Cu	COPPER
						NAT	NATURAL	G.B.	GRAB BAR	CU. FT.	CUBIC FEET (FOOT)
						NC	NORMALLY CLOSED	GC	GENERAL CONTRACTOR	C.U.H.	CABINET UNIT HEATER
						NEC	NATIONAL ELECTRICAL CODE	GEN	GENERATOR	CU IN	CUBIC INCH
						NEMA	NATIONAL ELECTRICAL	GFCI	GROUND FAULT CIRCUIT	CULV	CULVERT
							MANUFACTURERS ASSOCIATION		INTERRUPTER	CW	COLD WATER
						NEUT	NEUTRAL	GFI	GROUND FAULT INDICATOR	CWT	CERAMIC WALL TILE
						NF	NON-FUSED	G.I.	GALVANIZED IRON	CY	CUBIC YARD
						NFPA	NATIONAL FIRE PROTECTIVE	GKT	GASKET	CLY	CYLINDER
							ASSOCIATION	GL	GLASS, GLAZING	CV	COEFFICIENT, VALVE FLOW
						NIC	NOT IN CONTRACT	G.L.	GRID LINE		
						NL	NIGHT LIGHT	GOL	GAUGE OUTSTANDING LEG		
						NO	NORMALLY OPEN	GPD	GALLONS PER DAY		
						NO.	NUMBER	GPH	GALLONS PER HOUR		
						NOM	NOMINAL	GPM	GALLONS PER MINUTE		
						NPS	NOMINAL PIPE SIZE (also called IPS)	GR	GRADE		
						NRC	NOISE REDUCTION COEFFICIENT	GRAN	GRANITE		
						NT	NUMBER OF TUBES	GRAV.	GRAVEL		
						NTS	NOT TO SCALE	GRD	GROUND		
								G.V.	GATE VALVE		
								GYP	GYPSUM		
								GYP BD	GYPSUM WALLBOARD		

MATERIAL LEGEND

EARTH

SAND

FILL

SAND FILL

CONCRETE

STONE

CONCRETE CURB

FINISH WOOD

PLYWOOD

RIGID INSULATION

BLANKET OR BATT INSULATION

SPRAYED ON INSULATION OR FIREPROOFING

GASKET MATERIAL OR JOINT FILLER

GYPSUM BOARD OR PLASTER

SUSPENDED ACOUSTIC CEILING TILE

REFERENCE SYMBOLS

DETAIL / SECTION / WALL SECTION REFERENCE

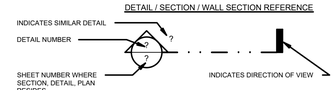

BUILDING SECTION REFERENCE

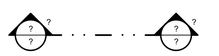

CALLOUT / ENLARGED PLAN / DETAIL REFERENCE

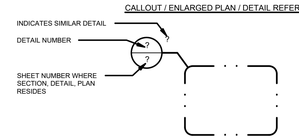

EXTERIOR ELEVATION INTERIOR ELEVATION

A1 — WALL TAG, SEE PARTITION TYPES A-591

HM1 — WINDOW TAG, SEE WINDOW SCHEDULE A-601

B101-1 — DOOR TAG, SEE DOOR SCHEDULE A-601

0 — COLUMN GRID

ROOM NAME — ROOM NAME

101 — ROOM NUMBER

SR

310 Nova Albion Way
San Rafael, CA 94903 415.492.3200

Terra Linda High School Modernization

310 Nova Albion Way
San Rafael, CA 94903 415.492.3200

Date	Issued For
1/17/2020	DSA Submittal

HED

417 Montgomery Street
Suite 400
San Francisco, California
94104 USA

(415) 981-2345

WWW.HED.DESIGN

© 2019

ARCHITECTURAL ABBREVIATIONS AND LEGENDS

G-002

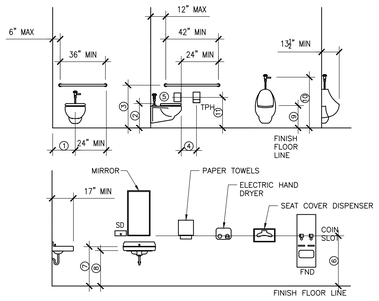

10 (E) RESTROOM ACCESSORIES
1/4" = 1'-0"

ACCESSIBLE TOILET FIXTURE AND ACCESSORY		
AGE GROUP:	A = ADULT DIMENSIONS (AGE 12 AND OVER)	
	DIMENSIONS	A (INCHES)
1	TOILET CENTERING FROM WALL	17–18
2	TOILET SEAT HEIGHT TO TOP OF SEAT	17–19
3	GRAB BAR HEIGHT (SIDE)	25–27 TO TOP OF BAR
4	TOILET PAPER IN FRONT OF TOILET	7–9
5	NAPKIN DISPOSAL	19 MIN. TO OPENING
6	DISPENSER OR MIRROR HEIGHT *	40
7	LAVATORY/SINK TOP HEIGHT	34
8	LAVATORY/SINK KNEE CLEARANCE	27 MIN.
9	URINAL LIP HEIGHT	17 MAX.
10	URINAL FLUSH HANDLE HEIGHT	44 MAX.
11	TOILET PAPER HEIGHT	19 MIN. TO OUTLET

* MIRROR TO BE 35" MAX. A.F.F., WHERE NOT MOUNTED ABOVE A LAVATORY OR COUNTER.

LEGEND

- (E) WALL TO REMAIN
- (E) CONC. WALL
- (E) 2 HR RATED WALL
- SHADED AREA NOT IN SCOPE OF WORK
- RESTROOM ### — ROOM NAME & NUMBER (TAG)
- 30" X 48" ACCESSIBLE CLEAR SPACE
- 60" DIA. ACCESSIBLE CLEAR SPACE

GENERAL NOTES

1. EXISTING GRAB BARS SHALL BE FREE OF OBJECTS WITHIN THE CLEAR AREA REQUIRED 12" ABOVE AND 1-1/2" BELOW IN A TOILET FACILITY.

2. RESTROOMS ARE EXISTING AND PER A# 01-117586

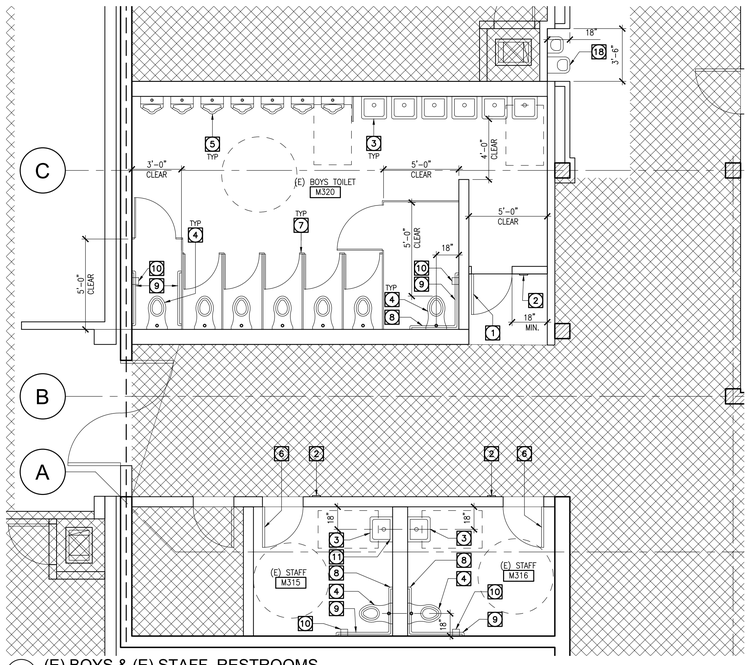

12 (E) BOYS & (E) STAFF RESTROOMS
1/4" = 1'-0"

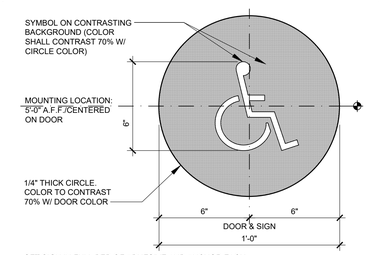

SET SIGN IN FULL BED OF ADHESIVE AND ANCHOR EACH CORNER WITH #8 COUNTERSUNK TAMPER-RESISTANT SCREWS. USE TYPE OF SCREW (SHEET METAL SCREW, WOOD SCREW OR CONCRETE SCREW) APPLICABLE FOR SUBSTRATE ANCHORAGE.

9 ACCESSIBLE GIRLS RR DOOR SIGN
3" = 1'-0"

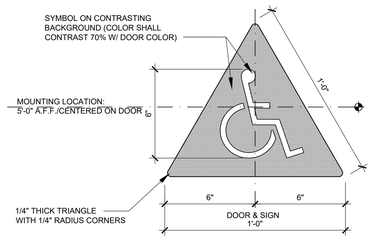

SET SIGN IN FULL BED OF ADHESIVE AND ANCHOR EACH CORNER WITH #8 COUNTERSUNK TAMPER-RESISTANT SCREWS. USE TYPE OF SCREW (SHEET METAL SCREW, WOOD SCREW OR CONCRETE SCREW) APPLICABLE FOR SUBSTRATE ANCHORAGE.

8 ACCESSIBLE BOYS RR SIGN
3" = 1'-0"

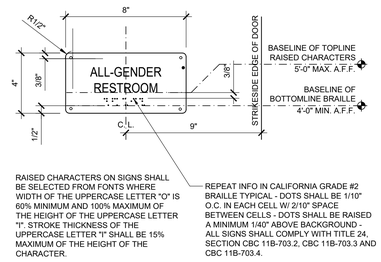

RAISED CHARACTERS ON SIGNS SHALL BE SELECTED FROM FONTS WHERE WIDTH OF THE UPPERCASE LETTER "O" IS 60% MINIMUM AND 100% MAXIMUM OF THE HEIGHT OF THE UPPERCASE LETTER "I". STROKE THICKNESS OF THE UPPERCASE LETTER "I" SHALL BE 15% MAXIMUM OF THE HEIGHT OF THE CHARACTER.

REPEAT INFO IN CALIFORNIA GRADE #2 BRAILLE TYPICAL - DOTS SHALL BE 1/10" O.C. IN EACH CELL W/ 2/10" SPACE BETWEEN CELLS - DOTS SHALL BE RAISED A MINIMUM 1/40" ABOVE BACKGROUND - ALL SIGNS SHALL COMPLY WITH TITLE 24, SECTION CBC 11B-703.2, CBC 11B-703.3 AND CBC 11B-703.4.

7 ACCESSIBLE RR WALL SIGN
3" = 1'-0"

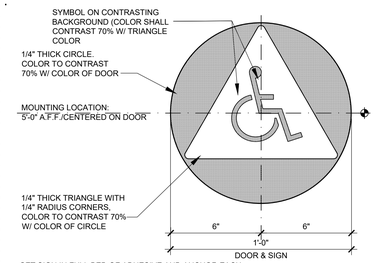

SET SIGN IN FULL BED OF ADHESIVE AND ANCHOR EACH CORNER WITH #8 COUNTERSUNK TAMPER-RESISTANT SCREWS. USE TYPE OF SCREW (SHEET METAL SCREW, WOOD SCREW OR CONCRETE SCREW) APPLICABLE FOR SUBSTRATE ANCHORAGE.

6 ACCESSIBLE UNISEX SIGN
3" = 1'-0"

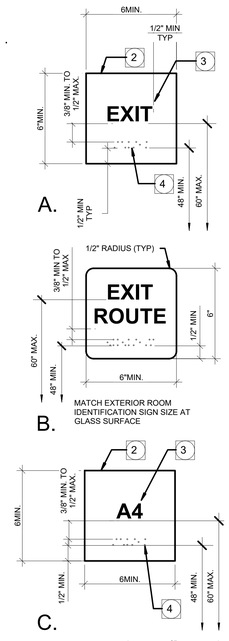

SIGNAGE KEYNOTES:

1. INTERNATIONAL SYMBOL OF ACCESSIBILITY PER DETAIL
2. BACKGROUND MATERIAL: 1/8" ACRYLIC PLASTIC BASE PLATE, EGGSHELL OR MATTE FINISH, COLOR TO MATCH SHERWIN-WILLIAMS "GRAY SCREEN" #7071
3. SYMBOLS AND CHARACTERS: EGGSHELL OR MATTE FINISH, BLACK (MINIMUM 70% CONTRAST WITH BACKGROUND COLOR)
   A. TEXT TYPE: SANS-SERIF, UPPERCASE, RAISED 1/32" MINIMUM ABOVE BACKGROUND SURFACE HEIGHT 5/8" MINIMUM, 2" MAXIMUM, 9" FOR BUILDING IDENTIFICATION
   B. LETTER PROPORTIONS: WIDTH-TO-HEIGHT RATIO BETWEEN 3:5 AND 1:1; STROKE WIDTH-TO-HEIGHT RATIO 15% MAX
4. SEE SPECIFICATIONS SECTION 10431 PER CALIFORNIA CONTRACTED GRADE II BRAILLE. BRAILLE MESSAGE IS TO LIST TEXT ONLY SPELLED OUT IN FULL (NO ABBREVIATIONS).
5. DIRECTIONAL SIGN, 3" MIN CAP HEIGHT, COLOR: CONTRASTING

NOTES:
- SEE FLOOR PLAN/DOOR SCHEDULE AND PLAN FOR SIGNAGE
- ROOM NAMES/NUMBERS TO BE SPECIFIED BY THE DISTRICT U.O.N.

2 ROOM AND EXIT SIGNS
3" = 1'-0"

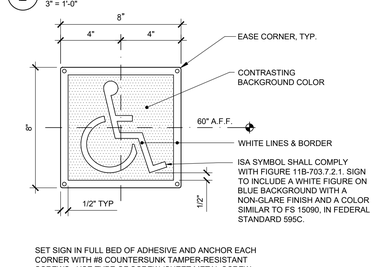

SET SIGN IN FULL BED OF ADHESIVE AND ANCHOR EACH CORNER WITH #8 COUNTERSUNK TAMPER-RESISTANT SCREWS. USE TYPE OF SCREW (SHEET METAL SCREW, WOOD SCREW OR CONCRETE SCREW) APPLICABLE FOR SUBSTRATE ANCHORAGE, TYP.

1 ACCESSIBLE BUILDING SIGN
3" = 1'-0"

NOTES (TYPICAL, U.O.N.)

1. (E) RESTROOM DOOR ACCESSIBLE SIGN, SEE DETAILS 8 & 9
2. (E) RESTROOM SIGN, SEE DETAIL 7
3. (E) LAVATORY.
4. (E) TOILET (HT. PER TABLE).
5. (E) URINAL.
6. (E) STAFF DOOR SIGN, SEE DETAIL 6
7. (E) TOILET PARTITION.
8. (E) 1-1/2" DIA. X 36" GRAB BAR.
9. (E) 1-1/2' DIA. X 42" GRAB BAR.
10. (E) TOILET PAPER DISPENSER.
11. (E) SOAP DISPENSER.
12. (E) TOILET SEAT COVER DISPENSER.
13. (E) MIRROR.
14. (E) TRASH RECEPTACLE.
15. NOT USED.
16. NOT USED.
17. NOT USED.
18. (E) HI-LO DRINKING FOUNTAIN, SEE DETAIL 15

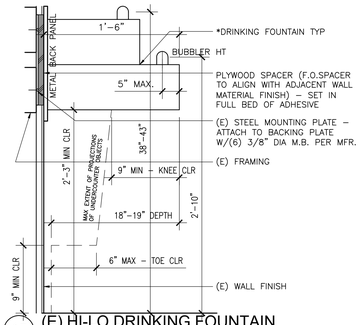

15 (E) HI-LO DRINKING FOUNTAIN
1-1/2" = 1'-0"

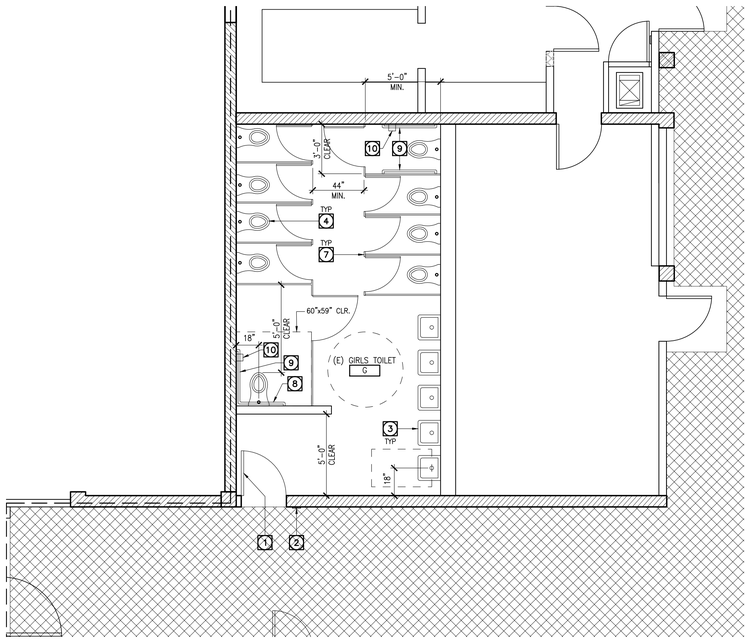

11 (E) GIRLS RESTROOM
1/4" = 1'-0"

SR
310 Nova Albion Way
San Rafael, CA 94903 415.492.3200

Terra Linda High School Modernization

310 Nova Albion Way
San Rafael, CA 94903
415.492.3200

Date	Issued For
1/17/2020	DSA Submittal

HED
417 Montgomery Street
Suite 400
San Francisco, California
94104 USA
(415) 981-2345
WWW.HED.DESIGN

© 2019

Signage Details & Existing Restrooms

G-003

OCCUPANT LOAD SCHEDULE

NUMBER	NAME	AREA	LOAD FACTOR	OCC LOAD	OCCUPANCY	EXITS REQUIRED	EXITS PROVIDED	SPRINKLERED
OCCUPIED								
A58A	CLASSROOM	962 SF	20	49	OCCUPIED	1	1	YES
A58B	CLASSROOM	962 SF	20	49	OCCUPIED	1	1	YES

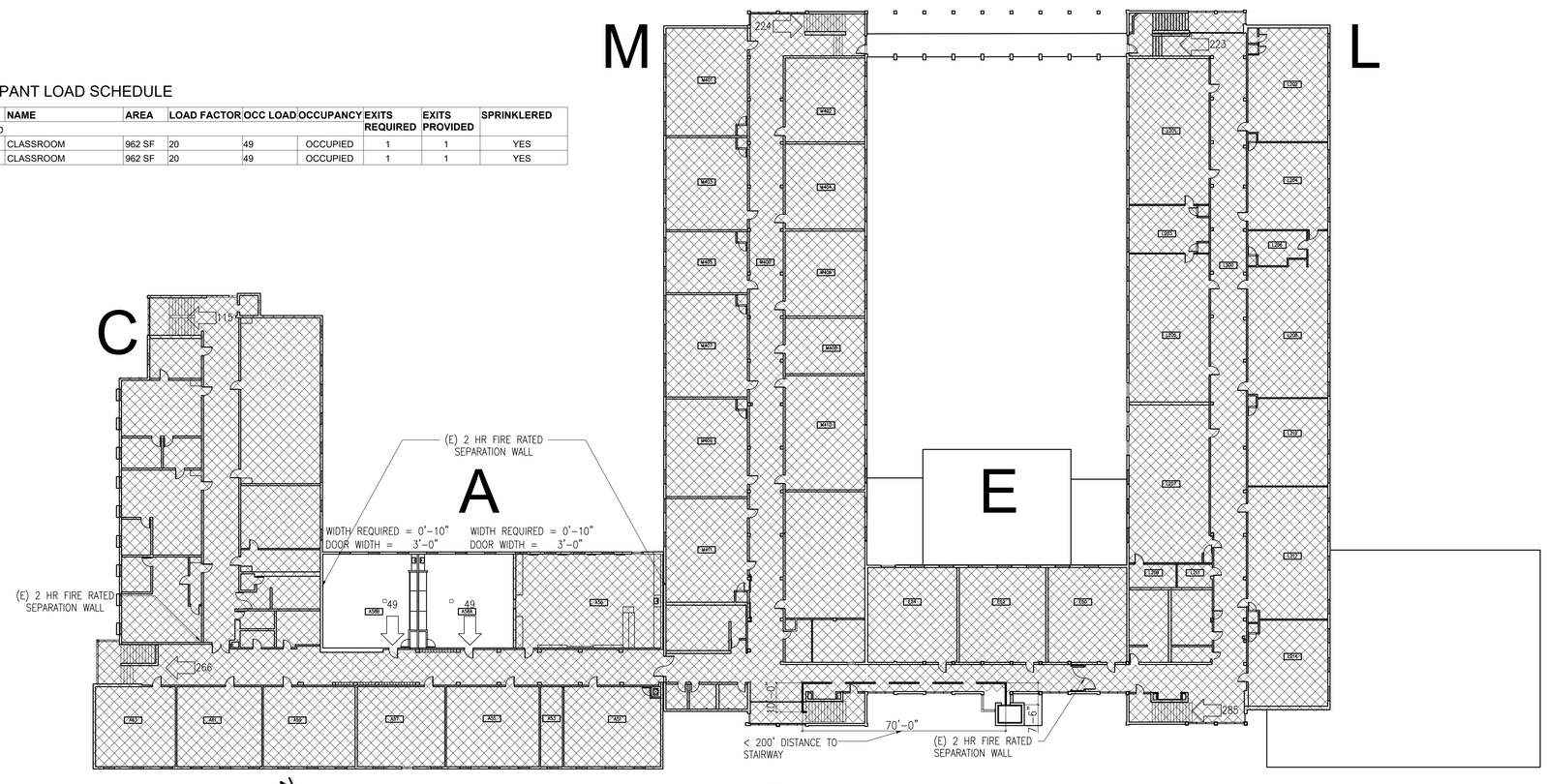

2 EXIT SECOND FLOOR PLAN
1" = 20'-0"

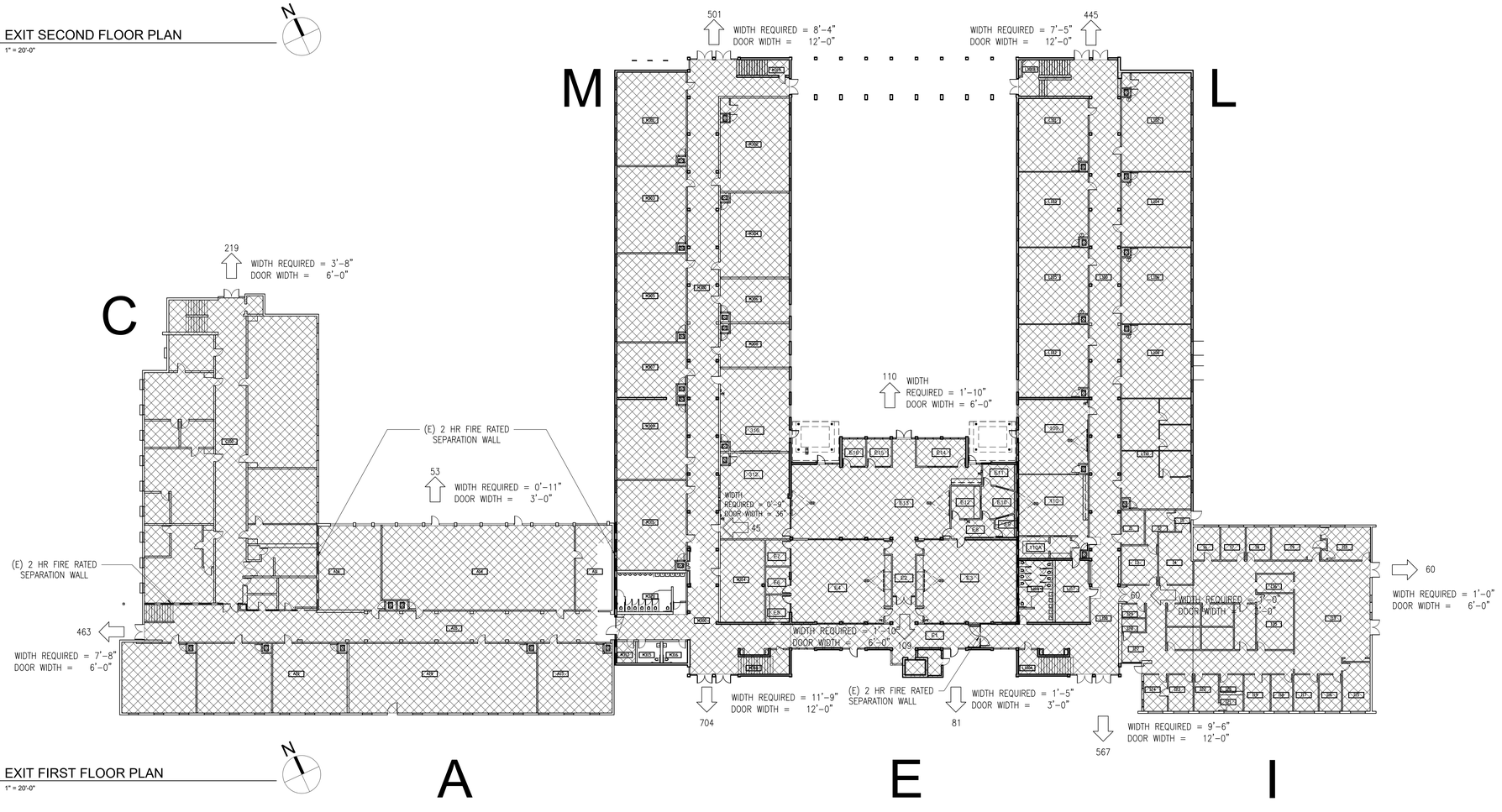

1 EXIT FIRST FLOOR PLAN
1" = 20'-0"

LEGEND

EXISTING BUILDING – NOT IN SCOPE

(E) 2 HR RATED WALL

140 EXIT DIRECTION W/ OCCUPANTS

GENERAL NOTES

1. EXIT WIDTH CALCULATED WITH 0.2 INCHES PER OCCUPANT PER SECTION 1005.3.2 CBC 2019
2. BUILDINGS ARE SPRINKLERED WITH EXCEPTION TO BUILDING C WHICH ARE DISTRICT OFFICES

SRL
310 Nova Albion Way
San Rafael, CA 94903 415.492.3200

Terra Linda High School
Modernization

310 Nova Albion Way
San Rafael, CA 94903
415.492.3200

Date	Issued For
1/17/2020	DSA Submittal

HED
417 Montgomery Street
Suite 400
San Francisco, California
94104 USA
(415) 981-2345
WWW.HED.DESIGN

© 2019

Code Compliance
Exiting Plan
Main Building

G-011

OCCUPANT LOAD SCHEDULE

NUMBER	NAME	AREA	LOAD FACTOR	OCC LOAD	OCCUPANCY	EXITS REQUIRED	EXITS PROVIDED
OCCUPIED							
K07	GYM	10,586SF	-	820	OCCUPIED	3	8

SEAT COUNT: 377 + 6 WHEELCHAIR LOCATIONS, 6 COMPANION SEAT "C" LOCATIONS, + 5 SEMI-ABULATORY SEAT "S" AS SHOWN, OR 407 + 3 SEMI-ABULATORY SEAT "S" MAXIMUM, WHEN RECOVERABLE MODULAR DECK UNITS AT WHEELCHAIR LOCATIONS ARE NOT RETRACTED

GYM AND LOBBY SF WITH BLEACHERS RETRACTED: 8,354 SF
GYM AND LOBBY SF WITH BLEACHERS EXPANDED: 10,768 SF

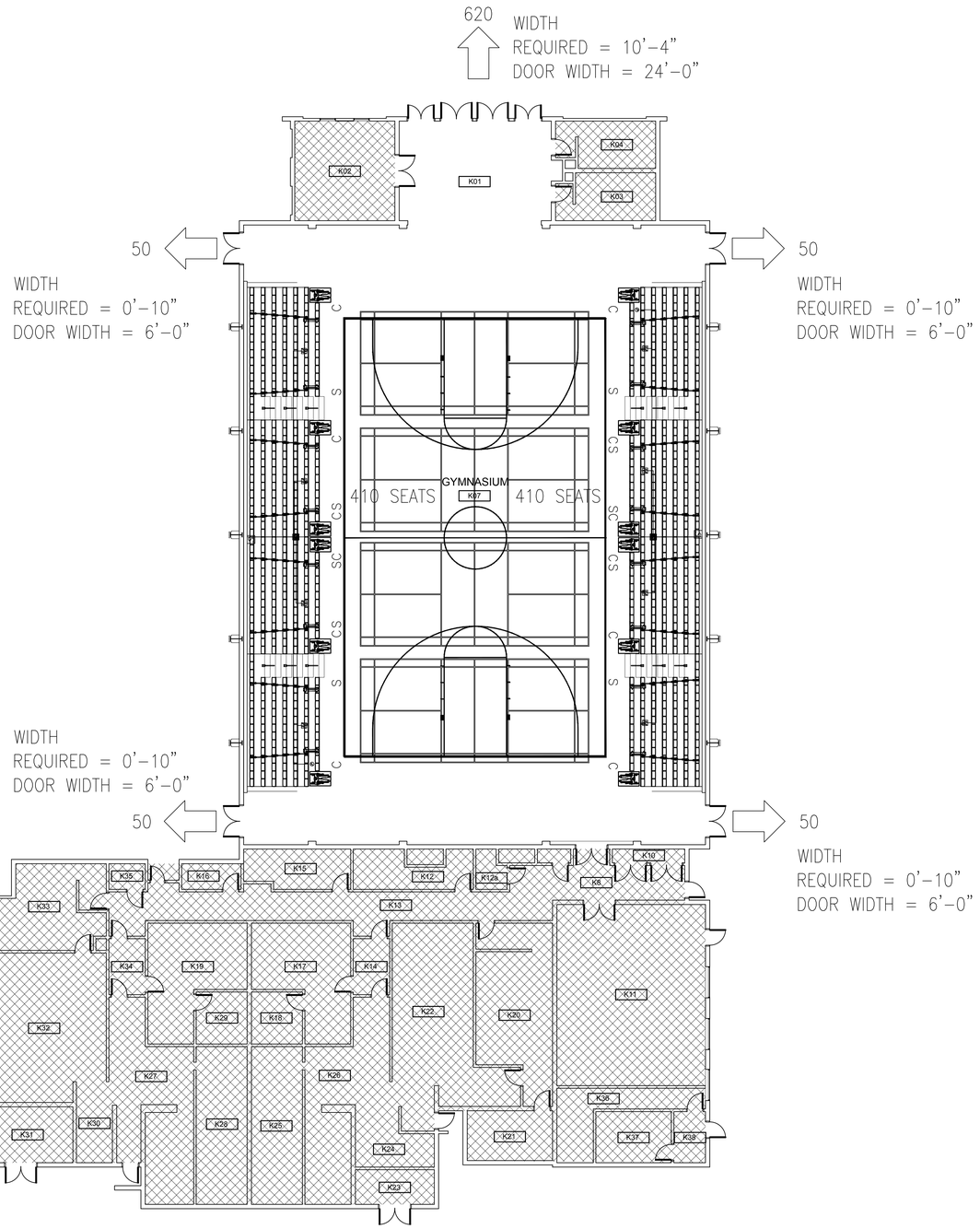

LEGEND

EXISTING BUILDING – NOT IN SCOPE

(E) 2 HR RATED WALL

140 EXIT DIRECTION W/ OCCUPANTS

GENERAL NOTES

1. EXIT WIDTH CALCULATED WITH 0.2 INCHES PER OCCUPANT PER SECTION 1005.3.2 CBC 2019

1 EXIT PLAN
3/32" = 1-0"

SR
310 Nova Albion Way
San Rafael, CA 94903 415.492.3200

Terra Linda High School
Modernization

310 Nova Albion Way
San Rafael, CA 94903
415.492.3200

Date	Issued For
1/17/2020	DSA Submittal

HED
417 Montgomery Street
Suite 400
San Francisco, California
94104 USA

(415) 981-2345

WWW.HED.DESIGN

© 2019

Code Compliance
Exiting Plan
Gym

G-012

TERRA LINDA HIGH SCHOOL MODERNIZATION

310 NOVA ALBION WAY
SAN RAFAEL, CA

LEGEND

EXISTING	PROPOSED	DESCRIPTION
		BOUNDARY
		PROPERTY LINE
		RETAINING WALL
		LANDSCAPE RETAINING WALL
		SUBDRAIN LINE
		TIGHTLINE
SD	SD	STORM DRAIN LINE
SS	SS	SANITARY SEWER LINE
W	W	WATER LINE
G	G	GAS LINE
P	P	PRESSURE LINE
JT	JT	JOINT TRENCH
		SET BACK LINE
		CONCRETE VALLEY GUTTER
		SWALE FLOW DIRECTION
CB	CB	CATCH BASIN
JB	JB	JUNCTION BOX
AD	AD	AREA DRAIN
AD	AD	SQUARE AREA DRAIN
		CURB INLET
SDMH	SDMH	STORM DRAIN MANHOLE
		FIRE HYDRANT
SSMH	SSMH	SANITARY SEWER MANHOLE
		STREET SIGN
222.57 INV	222.57 INV	SPOT ELEVATION
		FLOW DIRECTION
	D	DEMOLISH/REMOVE
		BENCHMARK
200	200	CONTOURS
XX TREE	XX TREE	TREE TO BE REMOVED

ABBREVIATIONS

AB	AGGREGATE BASE	LF	LINEAL FEET
AC	ASPHALT CONCRETE	MAX	MAXIMUM
ACC	ACCESSIBLE	MH	MANHOLE
AD	AREA DRAIN	MIN	MINIMUM
BC	BEGINNING OF CURVE	MON.	MONUMENT
B & D	BEARING & DISTANCE	(N)	NEW
BM	BENCHMARK	NO.	NUMBER
BW/FG	BOTTOM OFWALL/FINISH GRADE	NTS	NOT TO SCALE
CB	CATCH BASIN	O.C.	ON CENTER
C & G	CURB AND GUTTER	O/	OVER
℄	CENTER LINE	OMC	OPTIMUM MOISTURE CONTENT
CPP	CORRUGATED PLASTIC PIPE (SMOOTH INTERIOR)	(PA)	PLANTING AREA
		PED	PEDESTRIAN
CO	CLEANOUT	PIV	POST INDICATOR VALVE
CONC	CONCRETE	PSS	PUBLIC SERVICES EASEMENT
CONST	CONSTRUCT or –TION	ℙ	PROPERTY LINE
CONC COR	CONCRETE CORNER	PP	POWER POLE
CY	CUBIC YARD	PUC	PUBLIC UTILITY EASEMENT
D	DIAMETER	PVC	POLYVINYL CHLORIDE
DI	DROP INLET	R	RADIUS
DIP	DUCTILE IRON PIPE	RCP	REINFORCED CONCRETE PIPE
EA	EACH	RIM	RIM ELEVATION
EC	END OF CURVE	RW	RAINWATER
EG	EXISTING GRADE	R/W	RIGHT OF WAY
EL	ELEVATIONS	S	SLOPE
EP	EDGE OF PAVEMENT	S.A.D.	SEE ARCHITECTURAL DRAWINGS
EQ	EQUIPMENT	SAN	SANITARY
EW	EACH WAY	SD	STORM DRAIN
(E)	EXISTING	SDMH	STORM DRAIN MANHOLE
FC	FACE OF CURB	SHT	SHEET
FF	FINISHED FLOOR	S.L.D.	SEE LANDSCAPE DRAWINGS
FG	FINISHED GRADE	SPEC	SPECIFICATION
FH	FIRE HYDRANT	SS	SANITARY SEWER
FL	FLOW LINE	SSMH	SANITARY SEWER MANHOLE
FS	FINISHED SURFACE	ST.	STREET
G	GAS	STA	STATION
GA	GAGE OR GAUGE	STD	STANDARD
GB	GRADE BREAK	STRUCT	STRUCTURAL
HDPE	HIGH DENSITY CORRUGATED POLYETHYLENE PIPE	T	TELEPHONE
		TC	TOP OF CURB
HORIZ	HORIZONTAL	TEMP	TEMPORARY
HI PT	HIGH POINT	TP	TOP OF PAVEMENT
H&T	HUB & TACK	TW/FG	TOP OF WALL/FINISH GRADE
ID	INSIDE DIAMETER	TYP	TYPICAL
INV	INVERT ELEVATION	VC	VERTICAL CURVE
JB	JUNCTION BOX	VCP	VITRIFIED CLAY PIPE
JT	JOINT TRENCH	VERT	VERTICAL
JP	JOINT UTILITY POLE	W/	WITH
L	LENGTH	W, WL	WATER LINE
LNDG	LANDING	WM	WATER METER
		WWF	WELDED WIRE FABRIC

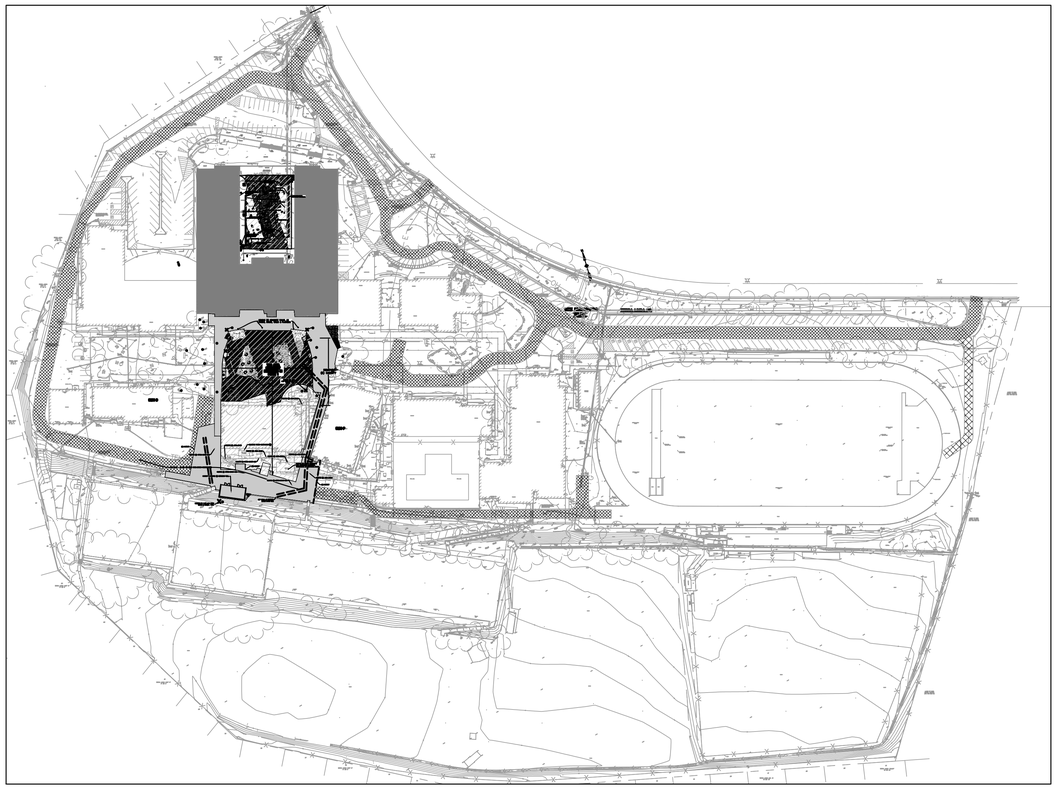

KEY MAP
1" = 100'

NOTES:

1. ALL GENERAL NOTES, SHEET NOTES, AND LEGEND NOTES FOUND IN THESE DOCUMENTS SHALL APPLY, TYPICALLY THROUGHOUT IF INCONSISTENCIES ARE FOUND IN THE VARIOUS NOTATIONS, NOTIFY THE ENGINEER IMMEDIATELY IN WRITING REQUESTING CLARIFICATION.
2. THESE DRAWINGS AND THEIR CONTENT ARE AND SHALL REMAIN THE PROPERTY OF WILLIAM CLARK, P.E. INC. WHETHER THE PROJECT FOR WHICH THEY ARE PREPARED IS EXCUTED OR NOT. THEY ARE NOT TO BE USED BY ANY PERSONS ON OTHER PROJECTS OR EXTENSIONS OF THE PROJECT EXCEPT BY AGREEMENT IN WRITING AND WITH PPROPRIATE COMPENSATION TO THE ENGINEER.
3. ALL WORK SHALL COMPLY WITH APPLICABLE CODES AND TRADE STANDARDS WHICH GOVERN EACH PHASE OF WORK INCLUDING, BUT NOT LIMITED TO, CALIFORNIA MECHANICAL CODE, CALIFORNIA PLUMBING CODE, CALIFORNIA ELECTRICAL CODE, CALIFORNIA FIRE CODE, CALTRANS STANDARDS AND SPECIFICATIONS, AND ALL APPLICABLE STATE AND/OR LOCAL CODES AND/OR LEGISLATION.
4. IT IS THE RESPONSIBILITY OF THE CONTRACTOR AND ALL SUBCONTRACTORS TO CHECK AND VERIFY ALL CONDITIONS, DIMENSIONS, LINES AND LEVELS INDICATED. PROPER FIT AND ATTACHMENT OF ALL PARTS IS REQUIRED. SHOULD THERE BE ANY DISCREPANCIES, IMMEDIATELY NOTIFY THE ENGINEER FOR CORRECTION OR ADJUSTMENT THE EVENTOF FAILURE TO DO SO, THE CONTRACTOR SHALL BE RESPONSIBLE FOR CORRECTION OF ANY ERROR.
5. ALL DIMENSIONS AND CONDITIONS SHALL BE CHECKED AND VERIFIED ON THE JOB BY EACH SUBCONTRACTOR BEFORE HE/SHE BEGINS HIS/HER WORK. ANY ERRORS, OMISSION, OR DISCREPANCIES SHALL BE BROUGHT TO THE ATTENTION OF THE OWNER/CONTRACTOR BEFORE CONSTRUCTION BEGINS.
6. COMMENCEMENT OF WORK BY THE CONTRACTOR AND/OR ANY SUBCONTRACTOR SHALL INDICATE KNOWLEDGE AND ACCEPTANCE OF ALL CONDITIONS DESCRIBED IN THESE CONSTRUCTION DOCUMENTS, OR EXISTING ON SITE, WHICH COULD AFFECT THEIR WORK.
7. IF THE CONTRACTOR OBSERVES OR OTHERWISE BECOMES AWARE OF ANY FAULT OR DEFECT IN THE PROJECT OR NONCONFORMANCE WITH THE CONTRACT DOCUMENTS, PROMPT WRITTEN NOTICE THEREOF SHALL BE GIVEN BY THE CONTRACTOR TO THE ARCHITECT AND/OR ENGINEER.
8. THE ENGINEER SHALL NOT HAVE CONTROL OF OR CHARGE OF AND SHALL NOT BE RESPONSIBLE FOR CONSTRUCTION MEANS, METHODS, TECHNIQUES, SEQUENCES, OR PROCEDURES, OR FOR SAFETY PRECAUTIONS AND PROGRAMS IN CONNECTION WITH THE WORK, FOR THE ACTS OR OMISSIONS OF THE CONTRACTOR, SUBCONTRACTORS, OR ANY OTHER PERSONS PERFORMING ANY OF THE WORK, OR FOR THE FAILURE OF ANY OF THEM TO CARRY OUT THE WORK IN ACCORDANCE WITH THE CONTRACT DOCUMENTS.
9. CONTRACTOR IS RESPONSIBLE FOR ALL IMPORT AND EXPORT QUANTITIES AND/OR DISPOSAL/IMPORT COSTS.
10. CONTRACTOR SHALL BE RESPONSIBLE FOR HIRING AND MAKE PROVISIONS FOR WITHIN THEIR BID FOR A PROFESSIONAL LAND SURVEYOR TO PROVIDE CONSTRUCTION STAKING FOR THE PROJECT.

1-800-227-2600 CALL BEFORE YOU DIG USA UNDERGROUND SERVICE ALERT

SHEET INDEX

C0.01	TITLE SHEET
C1.01	DEMOLITION PLAN
C0.02	GRADING SPECIFICATIONS
C2.01	GRADING & DRAINAGE PLAN
C3.01	DETAILS
C4.01	CONSTRUCTION BEST MANAGEMENT PRACTICES

SAN RAFAEL CITY SCHOOLS
310 Nova Albion Way
San Rafael, CA 94903 415.492.3200

Terra Linda High School Modernization

310 Nova Albion Way
San Rafael, CA 94903
415.492.3200

Date	Issued For
1/17/2020	Design Development

CIVIL ENGINEER
CLARK CIVIL ENGINEERING
12700 HIGHWAY ONE,
POINT REYES STATION, CA 94956
TEL. (415) 295-4450
FAX (510) 372-0259
CCE PROJECT NO. 217039

HED
417 Montgomery Street
Suite 400
San Francisco, California
94104 USA

(415) 981-2345

WWW.HED.DESIGN

WILLIAM CLARK No. 65497 Exp. 09-30-21 REGISTERED PROFESSIONAL ENGINEER CIVIL

© 2019

TITLE SHEET

C0.01

GENERAL SITE NOTES:

1. CONTRACTOR SHALL VISIT THE SITE PRIOR TO BIDDING ON THIS WORK AND CONSIDER THE EXISTING CONDITIONS AND SITE CONSTRAINTS IN THE BID. CONTRACTOR SHALL BE IN THE POSSESSION OF AND FAMILIAR WITH ALL APPLICABLE GOVERNING AGENCIES STANDARD DETAILS AND SPECIFICATIONS PRIOR TO SUBMITTING OF A BID.
2. ALL WORK IN THE PUBLIC RIGHT-OF-WAY SHALL CONFORM TO ALL APPLICABLE GOVERNING AGENCIES STANDARD DETAILS & SPECIFICATIONS.
3. PRIOR TO BEGINNING WORK, AND AFTER INITIAL HORIZONTAL CONTROL STAKING, CONTRACTOR SHALL FIELD CHECK ALL ELEVATIONS MARKED WITH (E) AND REPORT ANY DISCREPANCIES GREATER THAN 0.05' TO OWNER'S PROJECT MANAGER AND CIVIL ENGINEER.
4. DAMAGE TO ANY EXISTING SITE IMPROVEMENTS, UTILITIES AND/OR SERVICES TO REMAIN SHALL BE RESPONSIBLE OF THE CONTRACTOR. CONTRACTOR SHALL REPAIR AND/OR REPLACE IN KIND.
5. CONTRACTOR SHALL REPLACE ALL STRUCTURES AND GRATE LIDS FOR VAULTS, CATCH BASINS, ETC.,, WITH VEHICULAR-RATED STRUCTURES IN ALL TRAFFIC ACCESSIBLE AREAS.
6. THE CONTRACTOR SHALL ADJUST TO FINAL GRADE ALL EXISTING AND/OR NEW MANHOLES, CURB INLETS, CATCH BASIN, VALVES, MONUMENT COVERS, AND OTHER CASTINGS WITHIN THE WORK AREA TO FINAL GRADE IN PAVEMENT AND LANDSCAPE AREAS UNLESS NOTED OTHERWISE.
7. CONTRACTOR AGREES THAT HE SHALL ASSUME SOLE AND COMPLETE RESPONSIBILITY FOR JOB SITE CONDITIONS DURING THE COURSE OF CONSTRUCTION OF THIS PROJECT INCLUDING SAFETY OF ALL PERSONS AND PROPERTY THAT THIS REQUIREMENT SHALL APPLY CONTINUOUSLY AND NOT TO BE LIMITED TO NORMAL WORKING HOURS AND THAT THE CONTRACTOR SHALL DEFEND INDEMNIFY AND HOLD THE OWNER, THE CONSULTING ENGINEER AND THE CITY HARMLESS FROM ANY AND ALL LIABILITY, REAL OR ALLEGED, IN CONNECTION WITH THE PERFORMANCE OF WORK ON THIS PROJECT. EXCEPTING FOR LIABILITY ARISING FROM THE SOLE NEGLIGENCE OF THE OWNER OR THE CONSULTING ENGINEER.
8. EXISTING PEDESTRIAN WALKWAYS. BIKE PATHS AND ACCESSIBLE PATHWAYS SHALL BE MAINTAINED, WHERE FEASIBLE, DURING CONSTRUCTION.
9. IF A CONFLICT ARISES BETWEEN THE SPECIFICATIONS AND THE PLANS NOTES, THE MORE STRINGENT REQUIREMENT SHALL GOVERN.
10. ALL WORK SHALL BE PERFORMED IN ACCORDANCE WITH THE GEOTECHNICAL REPORT BY A3GEO. TITLED "DESIGN LEVEL GEOTECHNICAL INVESTIGATION AND GEOLOGIC HAZARDS STUDY REPORT TERRA LINDA HIGH SCHOOL", DATED FEBRUARY 16, 2018.

TREE/PLANT PROTECTION NOTES:

1. PRIOR TO BEGINNING CONSTRUCTION ON SITE, CONTRACTOR SHALL IDENTIFY, CONFIRM WITH OWNER AND PROTECT EXISTING TREES AND PLANTS DESIGNED AS TO REMAIN.
2. PROVIDE 6 FOOT TALL TREE PROTECTION FENCE WITH DISTINCTIVE MARKING VISIBLE TO CONSTRUCTION EQUIPMENT, ENCLOSING DRIP LINES OF TREES DESIGNED TO REMAIN.
3. WORK REQUIRED WITHIN FENCE LINE SHALL BE HELD TO A MINIMUM, AVOID UNNECESSARY MOVEMENT OF HEAVY EQUIPMENT WITHIN FENCED AREA AND DO NOT PARK ANY VEHICLES UNDER DRIP LINE OR TREES. DO NOT STORE EQUIPMENT OR MATERIALS WITHIN FENCE LINE.
4. PRIOR TO REMOVING ROOTS AND BRANCHES LARGER THAN 2" IN DIAMETER OF TREES OR PLANTS THAT ARE TO REMAIN, CONSULT WITH THE OWNER'S PROJECT MANAGER.
5. ANY GRADE CHANGES GREATER THAN 6" WITHIN THE DRIPLINE OF EXISTING TREES SHALL NOT BE MADE WITHOUT FIRST CONSULTING THE ARCHITECT / CIVIL ENGINEER.
6. PROTECT EXISTING TREES TO REMAIN FROM SPILLED CHEMICALS, FUEL OIL, MOTOR OIL, GASOLINE AND ALL OTHER CHEMICALLY INJURIOUS MATERIALS; AS WELL AS FROM PADDLING OR CONTINUOUSLY RUNNING WATER. SHOULD A SPILL OCCUR, STOP WORK IN THAT AREA AND CONTACT THE INSPECTOR IMMEDIATELY. CONTRACTOR SHALL BE RESPONSIBLE TO MITIGATE DAMAGE FROM SPILLED MATERIAL AS WELL AS MATERIAL CLEAN UP.
7. PROVIDE TEMPORARY IRRIGATION TO ALL TREES AND PLANTS THAT ARE IN OR ADJACENT TO CONSTRUCTION AREAS WHERE EXISTING IRRIGATION SYSTEMS MAY BE AFFECTED BY THE CONSTRUCTION. ALSO PROVIDE TEMPORARY IRRIGATION TO RELOCATE TREES.
8. CONTRACTOR SHALL BE RESPONSIBLE FOR ONGOING MAINTENANCE OF ALL TREES AND PLANTS DESIGNED TO REMAIN AND FOR MAINTENANCE OF RELOCATED TREES STOCKPILED DURING CONSTRUCTION. CONTRACTOR WILL BE REQUIRED TO REPLACE TREES OR PLANTS THAT DIE DUE TO LACK OF MAINTENANCE.
9. TREE PROTECTION ZONES NEED TO BE SET UP WITH FENCING AROUND TREES TO A MINIMUM DISTANCE OF 10 FEET FROM THE BUTTRESS FLAIR. NO EQUIPMENT, MATERIALS STORAGE, OR DIGGING IS ALLOWED WITHIN THE TREE PROTECTION ZONE WITHOUT WRITTEN AUTHORIZATION FROM THE PROJECT ARBORIST, ARBORIST SUPERVISOR OR AUTHORIZED DESIGNATE. ANY AUTHORIZED DIGGING WITHIN THE TREE PROTECTION ZONE MUST BE DONE BY HAND; I.E. PICK AND SHOVEL: CARE MUST BE TAKEN TO AVOID SEVERING ANY STRUCTURAL ROOTS. ANY ROOTS GREATER THAN 2" IN DIAMETER INCIDENTALLY SEVERED, WHETHER INSIDE OR OUTSIDE OF THE TREE PROTECTION ZONE, WILL NEED TO BE BROUGHT TO THE ATTENTION OF AND INSPECTED BY THE PROJECT ARBORIST, ARBORIST SUPERVISOR OR AUTHORIZED DESIGNATE; WHO WILL EVALUATE THE TREE IN QUESTION FOR IMPACTS TO BOTH LONG TERM HEALTH AND STABILITY. ANY ROOT SEVERANCE CONCLUDED TO COMPROMISE TREE STABILITY/SAFETY MAY RESULT IN TREE REMOVAL. ANY COSTS RESULTING FROM TREE REMOVALS WILL BE CHARGED TO THE PROJECT IN QUESTION. ANY COSTS FROM TREE REMOVALS RESULTING FROM VIOLATIONS OF THE COUNTY CODES WILL BE ABSORBED BY THE CONTRACTOR UP TO AND INCLUDING ANY FINES LEVIED BY THE COUNTY.

SITE MAINTENANCE:

1. REMOVE ALL DIRT, GRAVEL, RUBBISH, REFUSE, AND GREEN WASTE FROM STREET PAVEMENT AND STORM DRAINS ADJOINING THE SITE. LIMIT CONSTRUCTION ACCESS ROUTES ONTO THE SITE AND PLACE GRAVEL PADS AT THESE LOCATIONS. DO NOT DRIVE VEHICLES AND EQUIPMENT OFF THE PAVED OR GRAVELED AREAS DURING WET WEATHER.
2. SWEEP OR VACUUM THE STREET PAVEMENT AND SIDEWALKS ADJOINING THE PROJECT SITE AND THE ON-SITE PAVED AREAS ON A DAILY BASIS. SCRAPE CAKED-ON MUD AND DIRT FROM THESE AREAS BEFORE SWEEPING. CORNERS AND HARD TO REACH AREAS SHALL BE SWEPT MANUALLY.
3. CONTRACTOR SHALL: GATHER ALL CONSTRUCTION DEBRIS ON A REGULAR BASIS AND PLACE IT IN A DUMPSTER OR OTHER CONTAINER WHICH IS EMPTIED OR REMOVED ON A REGULAR BASIS. WHEN APPROPRIATE, USE TARPS ON THE GROUND TO COLLECT FALLEN DEBRIS OR SPLATTERS THAT COULD CONTRIBUTE TO STORM WATER RUNOFF POLLUTION.
4. IF THE STREET, SIDEWALKS AND/OR PARKING LOT ARE PRESSURE WASHED, DEBRIS MUST BE TRAPPED AND COLLECTED TO PREVENT ENTRY INTO THE STORM DRAIN SYSTEM. NO CLEANING AGENT MAY BE DISCHARGED INTO THE STORM DRAIN. IF ANY CLEANING AGENT OR DEGREASER IS USED, WASHED WATER MUST BE COLLECTED AND DISCHARGED TO THE SANITARY SEWER, SUBJECT TO THE APPROVAL OF THE OWNER'S PROJECT MANAGER, OR OTHERWISE DISPOSED OF THROUGH APPROVED DISPOSAL METHODS.
5. CREATE A CONTAINED AND COVERED AREA ON THE SITE FOR THE STORAGE OF BAGS, CEMENT, PAINTS, OILS, FERTILIZERS, PESTICIDES, OR OTHER MATERIAL USED ON THE SITE THAT HAVE THE POTENTIAL OF BEING WIND-BLOWN OR IN THE EVENT OF A MATERIAL SPILL.
6. NEVER CLEAN MACHINERY, EQUIPMENT OR TOOLS INTO A STREET, GUTTER OR STORM DRAIN.
7. ENSURE THAT CEMENT TRUCKS, PAINTERS, OR STUCCO/PLASTER FINISHING CONTRACTORS DO NOT DISCHARGE WASH WATER FROM EQUIPMENT, TOOLS OR RINSE CONTAINERS INTO GUTTERS OR DRAINS.
8. THE ON-SITE STORM DRAIN FACILITIES SHALL BE CLEANED A MINIMUM OF TWICE A YEAR AS FOLLOWS: IMMEDIATELY PRIOR TO OCTOBER 15TH AND ONCE IN JANUARY. ADDITIONAL CLEANING MAY BE REQUIRED IF FOUND NECESSARY BY THE INSPECTOR. CONTRACTOR SHALL BE RESPONSIBLE FOR COST ASSOCIATED WITH CLEANING.
9. PREVENT DUST FROM LEAVING THE SITE AND ACCUMULATING ON ADJACENT AREAS.
10. PREVENT SEDIMENT LADEN STORM RUN-OFF FROM LEAVING THE SITE OR ENTERING STORM DRAIN OR SANITARY SEWER SYSTEMS.
11. MAINTAIN EXISTING TREES AND PLANTS THAT ARE TO REMAIN AS REQUIRED BY THE TREE AND PLANT PROTECTION NOTES ON THE SHEET.

STORM DRAIN NOTES:

1. ALL STORM DRAIN PIPE SHALL BE PVC (SDR-35) OR HDPE AS INDICATED ON THE SITE PLAN PER SECTION 33 40 00, SLOPED AT 2% UNLESS OTHERWISE SPECIFIED ON THE PLANS. PIPE SHALL BE SIZED AS SPECIFIED ON THE PLANS. ALL DIRECTION CHANGES SHALL BE MADE WITH A Y CONNECTION OR LONG SWEEP ELBOWS, REGULAR ELBOWS, AND TEE'S SHOULD BE AVOIDED.
2. USE DETECTABLE METALIZED WARNING TAPE APPROXIMATE 6" BELOW THE SURFACE. TAPE SHALL BE A BRIGHT COLOR AND IMPRINTED WITH "CAUTION- STORM DRAIN LINE BELOW", CALPICO TYPE 2 OR EQUAL.
3. PAINT THE TOP OF THE CURBS ADJACENT TO EACH CATCH BASIN INSTALLED UNDER THE WORK OR ADJACENT TO THIS SITE WITH THE WORDS "NO DUMPING". WORDING TO BE BLUE 4" HIGH LETTERS ON A PAINTED WHITE BACKGROUND.
4. ALL AREA DRAINS AND CATCH BASINS GRATES WITHIN PEDESTRIAN ACCESSIBLE AREAS SHALL MEET ADA REQUIREMENTS AND HAVE BOLT DOWN GRATES.
5. ALL TRENCHES SHALL BE BACKFILLED PER THE SPECIFICATIONS WITH APPROPRIATE TEST BY THE GEOTECHNICAL ENGINEER TO VERIFY COMPACTION VALUES.
6. FOR GRAVITY FLOW SYSTEMS CONTRACTOR SHALL VERIFY (POTHOLE IF NECESSARY) SIZE, MATERIAL, LOCATION AND DEPTH OF ALL SYSTEMS THAT ARE TO BE CONNECTED TO OR CROSSED PRIOR TO TRENCH OR INSTALLATION OF ANY GRAVITY FLOW SYSTEM.
7. COMPLETE SYSTEMS: ALL UTILITY SYSTEMS ARE DELINEATED IN SCHEMATIC MANNER ON THESE PLANS. CONTRACTOR IS TO PROVIDE ALL FITTINGS, ACCESSORIES, AND WORK NECESSARY TO COMPLETE THE UTILITY SYSTEM SO THAT IT IS FULLY FUNCTIONING FOR THE PURPOSE INTENDED.

DEMOLITION NOTES:

1. CONTRACTOR IS TO COMPLY WITH ALL GENERAL AND STATE REQUIREMENTS INVOLVING THE REMOVAL AND DISPOSAL OF HAZARDOUS MATERIAL(S).
2. THE CONTRACTOR SHALL LOCATE AND CLEARLY MARK (AND THEN PRESERVE THESE MARKERS) FOR THE DURATION OF CONSTRUCTION OF ALL TELEPHONE, DATA, STREET LIGHT, SIGNAL LIGHT AND POWER FACILITIES THAT ARE IN OR NEAR THE AREA OF CONSTRUCTION.
3. CONTRACTOR'S BID IS TO INCLUDE ALL VISIBLE SURFACE AND ALL SUBSURFACE FEATURES IDENTIFIED TO BE REMOVED OR ABANDONED IN THESE DOCUMENTS.
4. THE CONTRACTOR SHALL BE RESPONSIBLE FOR A SITE INSPECTION TO FULLY ACKNOWLEDGE THE EXTENT OF THE DEMOLITION WORK PRIOR TO BID.
5. THE CONTRACTOR SHALL BE RESPONSIBLE FOR OBTAINING ANY AND ALL PERMITS NECESSARY FOR ENCROACHMENT, GRADING, DEMOLITION, AND STATE JURISDICTIONS. THE CONTRACTOR SHALL PAY ALL FEES ASSOCIATED.
6. CONTRACTOR SHALL PAY DISPOSAL FEES.
7. BACKFILL ALL DEPRESSIONS AND TRENCHES FROM DEMOLITION OF FOUNDATIONS & UTILITIES TO THE SATISFACTION OF THE GEOTECHNICAL ENGINEER.
8. WITHIN LIMITS OF WORK, REMOVE CURBS, GUTTERS, LANDSCAPING, SIGNAGE, TREES, SCRUBS, ASPHALT, UNDERGROUND PIPES, ETC. AS INDICATED ON THE PLANS AND SPECS.
9. REMOVAL OF LANDSCAPING SHALL INCLUDE ROOTS AND ORGANIC MATERIALS TO THE SATISFACTION OF THE GEOTECHNICAL ENGINEER.
10. PRIOR TO BEGINNING DEMOLITION WORK ACTIVITIES, CONTRACTOR SHALL INSTALL EROSION CONTROL MEASURES OUTLINED IN THE CONSTRUCTION BEST MANAGEMENT PRACTICES.
11. CONTRACTOR SHALL BE RESPONSIBLE FOR DISPOSING ALL DEMOLITION MATERIALS, OR STORING SELECTED ITEMS BY OWNER'S REPRESENTATIVE AT DESIGNATED LOCATIONS.
12. THE CONTRACTOR SHALL MAINTAIN ALL SAFETY DEVICES, AND SHALL BE RESPONSIBLE FOR CONFORMANCE TO ALL LOCAL, STATE AND FEDERAL SAFETY AND HEALTH STANDARDS LAWS AND REGULATIONS.
13. THE CONTRACTOR SHALL PROTECT FROM DAMAGE ALL EXISTING IMPROVEMENTS FACILITIES AND STRUCTURES WHICH ARE TO REMAIN. ANY ITEMS DAMAGED BY THE CONTRACTOR OR HIS AGENTS OF ANY ITEMS REMOVED FOR HIS USE SHALL BE REPLACED IN EQUAL OR BETTER CONDITION AS APPROVED BY THE ARCHITECT OR OWNER'S REPRESENTATIVE.
14. COORDINATE WITH ELECTRICAL, PLUMBING AND ARCHITECTURAL DRAWINGS FOR UTILITY SHUT-DOWN / DISCONNECT LOCATIONS. CONTRACTOR IS TO SHUT OFF ALL UTILITIES AS NECESSARY PRIOR TO DEMOLITION. CONTRACTOR IS TO COORDINATE SERVICE INTERRUPTIONS WITH THE OWNER. DO NOT INTERRUPT SERVICES ADJACENT OFF-SITE OWNERS. ALSO SEE ARCHITECTURAL PLANS FOR ADDITIONAL DEMOLITION SCOPE OF WORK.
15. DEMOLITION INCLUDES REMOVAL OF ALL ITEMS ASSOCIATED WITH THE UTILITIES AND SHALL INCLUDE PREPARING THE SITE FOR NEW UTILITIES, BUILDINGS, RETAINING WALLS, ETC.
16. ALL MATERIALS TO BE DEMOLISHED AND REMOVED SHALL BECOME THE PROPERTY OF THE CONTRACTOR AND SHALL BE LAWFULLY DISPOSED OF OFF-SITE.
17. THE PLAN IS NOT INTENDED TO BE A COMPLETE CATALOGUE OF ALL EXISTING STRUCTURES AND UTILITIES. THIS PLAN INTENDS TO DISCLOSE GENERAL INFORMATION KNOWN BY THE ENGINEER AND TO SHOW THE LIMITS OF THE AREA WHERE WORK WILL BE PERFORMED. THIS PLAN SHOWS THE EXISTING FEATURES TAKEN FROM A FIELD SURVEY, FIELD INVESTIGATIONS AND AVAILABLE INFORMATION. THIS PLAN MAY OR MAY NOT ACCURATELY REFLECT THE TYPE OR EXTENT OF THE ITEMS TO BE ENCOUNTERED AS THEY ACTUALLY EXIST. WHERE EXISTING FEATURES ARE NOT SHOWN, IT IS IMPLIED THAT THEY ARE NOT TO BE DEMOLISHED OR REMOVED. THE CONTRACTOR SHALL PERFORM A THOROUGH FIELD INVESTIGATION AND REVIEW OF THE SITE WITHIN THE LIMIT OF WORK SHOWN IN THIS PLAN SET TO DETERMINE THE TYPE, QUANTITY AND EXTENT OF ANY AND ALL ITEMS. THE CONTRACTOR SHALL BE SOLELY RESPONSIBLE FOR DETERMINING THE EXTENT OF EXISTING STRUCTURES AND UTILITIES AND QUANTITY OR WORK INVOLVED IN REMOVING THESE ITEMS FROM THE SITE.

WATER SYSTEM NOTES:

1. WHERE WATER LINES HAVE TO CROSS SANITARY SEWER LINES, DO SO AT A 90 DEGREE ANGLE AND WATER LINES SHALL BE MINIMUM OF 12" ABOVE THE TOP OF THE SANITARY SEWER LINES.
2. WATER LINES ARE SHOWN SCHEMATICALLY; CONTRACTOR SHALL IDENTIFY EACH ANGLE AND/ OR BEND THAT MAY BE REQUIRED TO ACCOMPLISH THE INTENDED DESIGN.
3. USE DETECTABLE METALIZED WARNING TAPE APPROXIMATELY 6" BELOW THE SURFACE, TAPE SHALL BE A BRIGHT COLOR AND IMPRINTED WITH "CAUTION-WATER LINE BELOW", CALPICO TYPE 2 OR EQUAL.
4. ALL WATER SERVICE CONNECTIONS SHALL BE INSTALLED IN ACCORDANCE WITH THE CITY/TOWN OR APPLICABLE WATER DISTRICT STANDARDS.
5. PUBLIC AND PRIVATE WATER MAIN AND WATER SERVICE LINE 4-INCH THROUGH 12-INCH SHALL BE POLYVINYL CHLORIDE (PVC) AND SHALL MEET AWWA C900, RATED FOR 200 PSI CLASS PIPE WITH EPOXY COATED DUCTILE IRON FITTINGS AND FUSION EPOXY COATED GATE VALVES. ALL JOINTS SHALL FACTORY MANUFACTURED WITH BELL AND SPIGOT ENDS AND RUBBER GASKETS. NONMETALLIC WATER LINES HAVE TRACER WIRE INSTALLED.
6. CONNECTION TO THE EXISTING WATER MAIN SHALL BE APPROVED BY WATER COMPANY. THE CONTRACTOR SHALL PERFORM ALL EXCAVATION PREPARE THE SITE, FURNISH ALL MATERIALS, INSTALL TAPPING TEE VALVE AND ALL THRUST BLOCKS. BACKFILL, RESTORE THE SURFACE, AND CLEANUP. ALL WET TAPS SHALL BE APPROVED BY CALIFORNIA WATER COMPANY (CALWATER). NONMETALLIC WATER LINES SHALL HAVE TRACER WIRES INSTALLED.
7. ALL WATER LINES 3" OR SMALLER SHALL BE TYPE K COPPER WITH SILVER BRAZED JOINTS. CONTRACTOR TO VERIFY PRESSURES FROM EXISTING LINES ARE ADEQUATE TO SERVICE BUILDINGS AS SPECIFIED BY THE PLUMBING PLANS.
8. ALL WATER LINES SHALL BE INSTALLED WITH 3' MINIMUM COVER.
9. ALL WATER VALVES SHALL BE PER CITY STANDARD.
10. ALL TEMPORARY AND/OR PERMANENT AIR-RELEASE AND BLOW-OFF VALVES SHALL BE PER CITY STANDARD AND AS DIRECTED BY THE CITY ENGINEER.
11. CONCRETE THRUST BLOCKS SHALL BE INSTALLED AT ALL TEES, CROSSINGS, BENDS (HORIZONTAL AND VERTICAL), AT SIZE CHANGES AND AT FIRE HYDRANTS PER CITY STANDARD. AWWA C600, SECTION 3.8 UNLESS NOTED OTHERWISE.
12. MECHANICALLY RESTRAINED JOINTS SHALL BE INSTALLED AT VERTICAL BENDS IN ACCORDANCE WITH CITY STANDARDS AND AS APPROVED BY THE CITY ENGINEER.
13. ALL WATER VALVES SHALL BE CLUSTERED, UNLESS OTHERWISE DIRECTED BY THE CITY ENGINEER.

SANITARY SEWER NOTES:

1. INSTALL DETECTABLE METALIZED WARNING TAPE APPROXIMATELY 6"-12" BELOW THE SERVICE IN NON-PAVED AREAS, AND AT THE BOTTOM OF BASEROCK FOR PAVED AREAS. GREEN IMPRINTED WITH "CAUTION- SANITARY SEWER LINE BELOW", CALPICO TYPE 2 OR EQUAL.
2. ALL SEWER WORK SHALL BE IN CONFORMANCE WITH THE CITY/TOWN OR APPROPRIATE SANITARY SEWER DISTRICT.
3. PUBLIC AND PRIVATE SANITARY SEWER MAIN AND SERVICE LINE 4-INCH THROUGH 8-INCH SHALL BE POLYVINYL CHLORIDE (PVC) SDR 26 GREEN SEWER PIPE AND SHALL CONFORM TO THE REQUIREMENTS OF ASTM DESIGNATION D3034-16 WITH GLUED JOINTS.

SITE FENCING NOTES:

1. CONTRACTOR SHALL PROVIDE A CONSTRUCTION FENCE AROUND THE ENTIRE AREA OF DEMOLITION AND CONSTRUCTION, INCLUDING ALL STAGING, STORAGE, CONSTRUCTION OFFICE AND LAYDOWN AREAS.
2. FENCE LOCATION MAY BE ADJUSTED FROM TIME TO TIME AS CONSTRUCTION PROCEEDS TO EXCLUDE SOME AREAS WHERE CONSTRUCTION WORK IS NOT BEING DONE AND THE AREA IS NOT OBJECTIONABLE IN VISUAL APPEARANCE, AT THE DISCRETION AND APPROVAL OF THE DISTRICT STAFF.
3. CONSTRUCTION FENCE SHALL BE A MINIMUM OF A 6' HIGH GALVANIZED CHAIN LINK FENCE WITH GREEN WINDSCREEN FABRIC ON THE OUTSIDE OF THE FENCE.
4. CONTRACTOR SHALL REPLACE THE GREEN FABRIC AT LEAST ONCE A YEAR OR AT SUCH A TIME AS IT BECOMES TATTERED AND UNSIGHTLY DUE TO WIND OR CONSTRUCTION ACTIVITIES.

SAN RAFAEL CITY SCHOOLS
310 Nova Albion Way
San Rafael, CA 94903 415.492.3200

Terra Linda High School Modernization

310 Nova Albion Way
San Rafael, CA 94903
415.492.3200

Date	Issued For
1/17/2020	Design Development

CIVIL ENGINEER
CLARK CIVIL ENGINEERING
12700 HIGHWAY ONE,
POINT REYES STATION, CA 94956
TEL. (415) 295-4450
FAX (510) 372-0259
CCE PROJECT NO. 217039

HED
417 Montgomery Street
Suite 400
San Francisco, California
94104 USA
(415) 981-2345
WWW.HED.DESIGN

© 2019

GRADING SPECIFICATIONS

C0.02

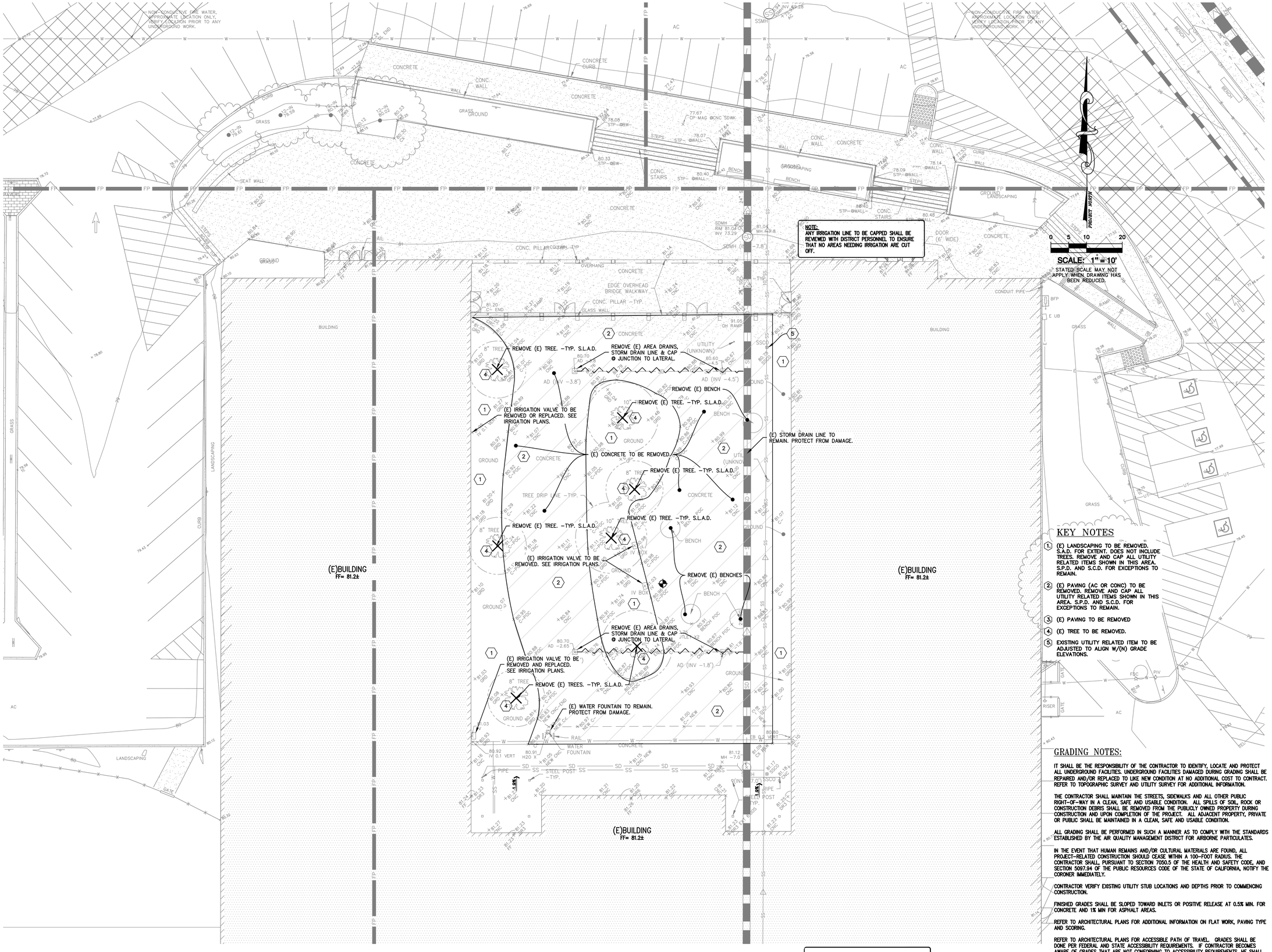

KEY NOTES

1. (E) LANDSCAPING TO BE REMOVED. S.A.D. FOR EXTENT. DOES NOT INCLUDE TREES. REMOVE AND CAP ALL UTILITY RELATED ITEMS SHOWN IN THIS AREA. S.P.D. AND S.C.D. FOR EXCEPTIONS TO REMAIN.
2. (E) PAVING (AC OR CONC) TO BE REMOVED. REMOVE AND CAP ALL UTILITY RELATED ITEMS SHOWN IN THIS AREA. S.P.D. AND S.C.D. FOR EXCEPTIONS TO REMAIN.
3. (E) PAVING TO BE REMOVED
4. (E) TREE TO BE REMOVED.
5. EXISTING UTILITY RELATED ITEM TO BE ADJUSTED TO ALIGN W/(N) GRADE ELEVATIONS.

GRADING NOTES:

IT SHALL BE THE RESPONSIBILITY OF THE CONTRACTOR TO IDENTIFY, LOCATE AND PROTECT ALL UNDERGROUND FACILITIES. UNDERGROUND FACILITIES DAMAGED DURING GRADING SHALL BE REPAIRED AND/OR REPLACED TO LIKE NEW CONDITION AT NO ADDITIONAL COST TO CONTRACT. REFER TO TOPOGRAPHIC SURVEY AND UTILITY SURVEY FOR ADDITIONAL INFORMATION.

THE CONTRACTOR SHALL MAINTAIN THE STREETS, SIDEWALKS AND ALL OTHER PUBLIC RIGHT-OF-WAY IN A CLEAN, SAFE AND USABLE CONDITION. ALL SPILLS OF SOIL, ROCK OR CONSTRUCTION DEBRIS SHALL BE REMOVED FROM THE PUBLICLY OWNED PROPERTY DURING CONSTRUCTION AND UPON COMPLETION OF THE PROJECT. ALL ADJACENT PROPERTY, PRIVATE OR PUBLIC SHALL BE MAINTAINED IN A CLEAN, SAFE AND USABLE CONDITION.

ALL GRADING SHALL BE PERFORMED IN SUCH A MANNER AS TO COMPLY WITH THE STANDARDS ESTABLISHED BY THE AIR QUALITY MANAGEMENT DISTRICT FOR AIRBORNE PARTICULATES.

IN THE EVENT THAT HUMAN REMAINS AND/OR CULTURAL MATERIALS ARE FOUND, ALL PROJECT-RELATED CONSTRUCTION SHOULD CEASE WITHIN A 100-FOOT RADIUS. THE CONTRACTOR SHALL, PURSUANT TO SECTION 7050.5 OF THE HEALTH AND SAFETY CODE, AND SECTION 5097.94 OF THE PUBLIC RESOURCES CODE OF THE STATE OF CALIFORNIA, NOTIFY THE CORONER IMMEDIATELY.

CONTRACTOR VERIFY EXISTING UTILITY STUB LOCATIONS AND DEPTHS PRIOR TO COMMENCING CONSTRUCTION.

FINISHED GRADES SHALL BE SLOPED TOWARD INLETS OR POSITIVE RELEASE AT 0.5% MIN. FOR CONCRETE AND 1% MIN FOR ASPHALT AREAS.

REFER TO ARCHITECTURAL PLANS FOR ADDITIONAL INFORMATION ON FLAT WORK, PAVING TYPE AND SCORING.

REFER TO ARCHITECTURAL PLANS FOR ACCESSIBLE PATH OF TRAVEL. GRADES SHALL BE DONE PER FEDERAL AND STATE ACCESSIBILITY REQUIREMENTS. IF CONTRACTOR BECOMES AWARE OF GRADES THAT ARE NOT CONFORMING TO ACCESSIBILITY REQUIREMENTS, HE SHALL BRING THIS TO THE ATTENTION OF THE ARCHITECT AND THE ENGINEER.

CUT AND FILL SLOPES AND GRADING TRANSITIONS AT THE OUTER EDGES OF THE PROPOSED IMPROVEMENTS ARE TO BE CONSTRUCTED AT THREE HORIZONTAL TO ONE VERTICAL (3:1) UNLESS OTHERWISE NOTED.

SAN RAFAEL CITY SCHOOLS
310 Nova Albion Way
San Rafael, CA 94903 415.492.3200

Terra Linda High School Modernization

310 Nova Albion Way
San Rafael, CA 94903
415.492.3200

Date	Issued For
1/17/2020	Design Development

CIVIL ENGINEER
CLARK CIVIL ENGINEERING
12700 HIGHWAY ONE,
POINT REYES STATION, CA 94956
TEL. (415) 295-4450
FAX (510) 372-0259
CCE PROJECT NO. 217039

HED
417 Montgomery Street
Suite 400
San Francisco, California
94104 USA
(415) 981-2345
WWW.HED.DESIGN

© 2019

DEMOLITION PLAN

C1.01

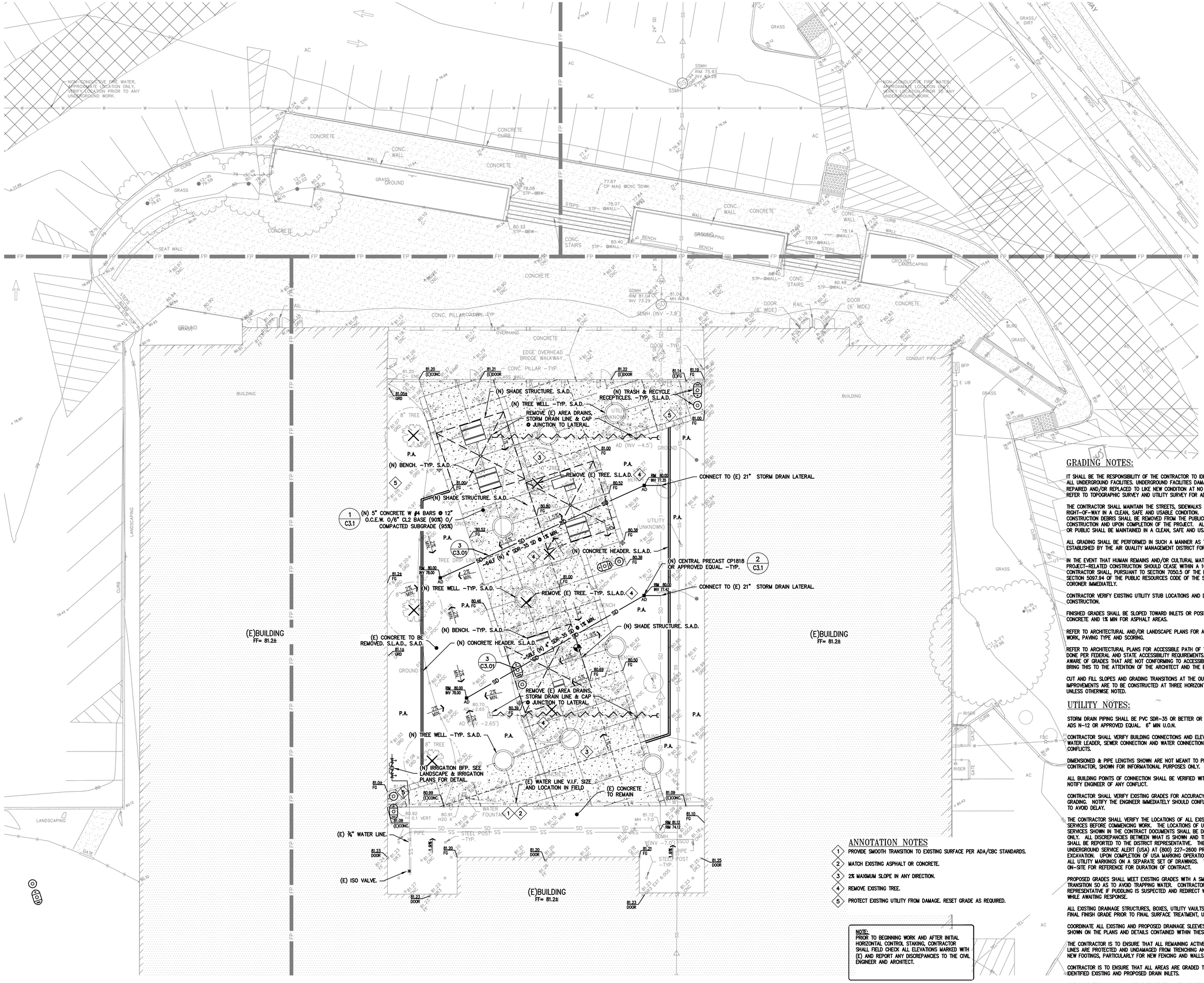

GRADING NOTES:

IT SHALL BE THE RESPONSIBILITY OF THE CONTRACTOR TO IDENTIFY, LOCATE AND PROTECT ALL UNDERGROUND FACILITIES. UNDERGROUND FACILITIES DAMAGED DURING GRADING SHALL BE REPAIRED AND/OR REPLACED TO LIKE NEW CONDITION AT NO ADDITIONAL COST TO CONTRACT. REFER TO TOPOGRAPHIC SURVEY AND UTILITY SURVEY FOR ADDITIONAL INFORMATION.

THE CONTRACTOR SHALL MAINTAIN THE STREETS, SIDEWALKS AND ALL OTHER PUBLIC RIGHT-OF-WAY IN A CLEAN, SAFE AND USABLE CONDITION. ALL SPILLS OF SOIL, ROCK OR CONSTRUCTION DEBRIS SHALL BE REMOVED FROM THE PUBLICLY OWNED PROPERTY DURING CONSTRUCTION AND UPON COMPLETION OF THE PROJECT. ALL ADJACENT PROPERTY, PRIVATE OR PUBLIC SHALL BE MAINTAINED IN A CLEAN, SAFE AND USABLE CONDITION.

ALL GRADING SHALL BE PERFORMED IN SUCH A MANNER AS TO COMPLY WITH THE STANDARDS ESTABLISHED BY THE AIR QUALITY MANAGEMENT DISTRICT FOR AIRBORNE PARTICULATES.

IN THE EVENT THAT HUMAN REMAINS AND/OR CULTURAL MATERIALS ARE FOUND, ALL PROJECT-RELATED CONSTRUCTION SHOULD CEASE WITHIN A 100-FOOT RADIUS. THE CONTRACTOR SHALL, PURSUANT TO SECTION 7050.5 OF THE HEALTH AND SAFETY CODE, AND SECTION 5097.94 OF THE PUBLIC RESOURCES CODE OF THE STATE OF CALIFORNIA, NOTIFY THE CORONER IMMEDIATELY.

CONTRACTOR VERIFY EXISTING UTILITY STUB LOCATIONS AND DEPTHS PRIOR TO COMMENCING CONSTRUCTION.

FINISHED GRADES SHALL BE SLOPED TOWARD INLETS OR POSITIVE RELEASE AT 0.5% MIN. FOR CONCRETE AND 1% MIN FOR ASPHALT AREAS.

REFER TO ARCHITECTURAL AND/OR LANDSCAPE PLANS FOR ADDITIONAL INFORMATION ON FLAT WORK, PAVING TYPE AND SCORING.

REFER TO ARCHITECTURAL PLANS FOR ACCESSIBLE PATH OF TRAVEL. GRADES SHALL BE DONE PER FEDERAL AND STATE ACCESSIBILITY REQUIREMENTS. IF CONTRACTOR BECOMES AWARE OF GRADES THAT ARE NOT CONFORMING TO ACCESSIBILITY REQUIREMENTS, HE SHALL BRING THIS TO THE ATTENTION OF THE ARCHITECT AND THE ENGINEER.

CUT AND FILL SLOPES AND GRADING TRANSITIONS AT THE OUTER EDGES OF THE PROPOSED IMPROVEMENTS ARE TO BE CONSTRUCTED AT THREE HORIZONTAL TO ONE VERTICAL (3:1) UNLESS OTHERWISE NOTED.

UTILITY NOTES:

STORM DRAIN PIPING SHALL BE PVC SDR-35 OR BETTER OR DOUBLE WALLED HDPE PIPING ADS N-12 OR APPROVED EQUAL. 6" MIN U.O.N.

CONTRACTOR SHALL VERIFY BUILDING CONNECTIONS AND ELEVATION. THIS INCLUDES RAIN WATER LEADER, SEWER CONNECTION AND WATER CONNECTION. NOTIFY ENGINEER OF ANY CONFLICTS.

DIMENSIONED & PIPE LENGTHS SHOWN ARE NOT MEANT TO PROVIDE BID QUANTITIES FOR CONTRACTOR, SHOWN FOR INFORMATIONAL PURPOSES ONLY.

ALL BUILDING POINTS OF CONNECTION SHALL BE VERIFIED WITH BUILDING PLUMBING DRAWING. NOTIFY ENGINEER OF ANY CONFLICT.

CONTRACTOR SHALL VERIFY EXISTING GRADES FOR ACCURACY PRIOR TO THE STARTING OF GRADING. NOTIFY THE ENGINEER IMMEDIATELY SHOULD CONFLICTS ARISE AND REDIRECT WORK TO AVOID DELAY.

THE CONTRACTOR SHALL VERIFY THE LOCATIONS OF ALL EXISTING UTILITIES, STRUCTURES AND SERVICES BEFORE COMMENCING WORK. THE LOCATIONS OF UTILITIES STRUCTURES AND SERVICES SHOWN IN THE CONTRACT DOCUMENTS SHALL BE DEEMED TO BE APPROXIMATIONS ONLY. ALL DISCREPANCIES BETWEEN WHAT IS SHOWN AND THE ACTUAL FIELD CONDITIONS SHALL BE REPORTED TO THE DISTRICT REPRESENTATIVE. THE CONTRACTOR SHALL CONTACT UNDERGROUND SERVICE ALERT (USA) AT (800) 227-2600 PRIOR TO ANY DEMOLITION OR EXCAVATION. UPON COMPLETION OF USA MARKING OPERATIONS, CONTRACTOR SHALL RECORD ALL UTILITY MARKINGS ON A SEPARATE SET OF DRAWINGS. THIS SET SHALL BE KEPT ON-SITE FOR REFERENCE FOR DURATION OF CONTRACT.

PROPOSED GRADES SHALL MEET EXISTING GRADES WITH A SMOOTH AND CONTINUOUS TRANSITION SO AS TO AVOID TRAPPING WATER. CONTRACTOR SHALL NOTIFY DISTRICT REPRESENTATIVE IF PUDDLING IS SUSPECTED AND REDIRECT WORK SO AS TO AVOID DELAY WHILE AWAITING RESPONSE.

ALL EXISTING DRAINAGE STRUCTURES, BOXES, UTILITY VAULTS ETC. SHALL BE BROUGHT TO FINAL FINISH GRADE PRIOR TO FINAL SURFACE TREATMENT, UNLESS NOTED OTHERWISE.

COORDINATE ALL EXISTING AND PROPOSED DRAINAGE SLEEVES, AND UTILITY LOCATIONS AS SHOWN ON THE PLANS AND DETAILS CONTAINED WITHIN THESE CONTRACT DOCUMENTS.

THE CONTRACTOR IS TO ENSURE THAT ALL REMAINING ACTIVE AND NEW DRAINAGE AND UTILITY LINES ARE PROTECTED AND UNDAMAGED FROM TRENCHING AND FOOTING EXCAVATIONS FOR NEW FOOTINGS, PARTICULARLY FOR NEW FENCING AND WALLS.

CONTRACTOR IS TO ENSURE THAT ALL AREAS ARE GRADED TO PROVIDE POSITIVE DRAINAGE TO IDENTIFIED EXISTING AND PROPOSED DRAIN INLETS.

AREAS OF TRENCHING SHALL BE PATCHED TO MATCH EXISTING CONDITIONS TO LIKE NEW CONDITIONS, INCLUDING BUT NOT LIMITED TO SOD, CONCRETE AND ASPHALT

ANNOTATION NOTES

1. PROVIDE SMOOTH TRANSITION TO EXISTING SURFACE PER ADA/CBC STANDARDS.
2. MATCH EXISTING ASPHALT OR CONCRETE.
3. 2% MAXIMUM SLOPE IN ANY DIRECTION.
4. REMOVE EXISTING TREE.
5. PROTECT EXISTING UTILITY FROM DAMAGE. RESET GRADE AS REQUIRED.

NOTE:
PRIOR TO BEGINNING WORK AND AFTER INITIAL HORIZONTAL CONTROL STAKING, CONTRACTOR SHALL FIELD CHECK ALL ELEVATIONS MARKED WITH (E) AND REPORT ANY DISCREPANCIES TO THE CIVIL ENGINEER AND ARCHITECT.

SAN RAFAEL CITY SCHOOLS
310 Nova Albion Way
San Rafael, CA 94903 415.492.3200

Terra Linda High School Modernization

310 Nova Albion Way
San Rafael, CA 94903
415.492.3200

Date	Issued For
1/17/2020	Design Development

CIVIL ENGINEER
CLARK CIVIL ENGINEERING
12700 HIGHWAY ONE,
POINT REYES STATION, CA 94956
TEL. (415) 295-4450
FAX (510) 372-0259
CCE PROJECT NO. 217039

HED
417 Montgomery Street
Suite 400
San Francisco, California
94104 USA
(415) 981-2345
WWW.HED.DESIGN

© 2019

GRADING & DRAINAGE PLAN

C2.01

NOTES:

1. SLOPE ALL CONCRETE TO DRAIN 1% MIN.
2. NATURAL CONCRETE COLOR WITH BROOM FINISH.
3. EASE ALL EDGES R=1/2"
4. FELT SHALL BE NON-ASPHALTIC IMPREGNATED.

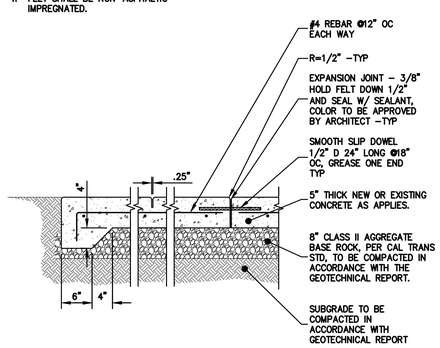

1 C3.01 **CONCRETE PAVING**
NTS

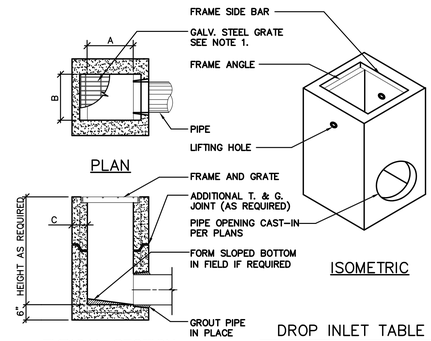

TYPICAL SECTION

NOTES:

1. ADA COMPLIANT GRATE TO HAVE A 1/2" GAP MAXIMUM IN ANY DIRECTION.
2. FRAMES AND GRATES MAY BE SPECIFIED FOR PEDESTRIAN OR H20 TRAFFIC LOADING. ALL GRATES ARE BICYCLE PROOF. OPTIONAL GRATE LOCKING DEVICE AVAILABLE ON REQUEST SEE DRAWING "LOCK" ON PAGE 1-7. CLOSED- MESH GRATES OR CAST IRON FRAME AND GRATES ARE AVAILABLE ON REQUEST.
3. FOR SURFACE AND DISCHARGE OPTIONS AVAILABLE SEE DRAWING NO. "DI-30" PAGE 1-6 AND "DI-00" PAGE 1-5.
4. FRAMES AND GRATES DETAILS SEE PAGES 1-8, 1-9, AND 1-10.
5. WALL THICKNESSES ON ALL D.I.S. CAN BE CHANGED UPON REQUEST.
6. 18" WIDE D.I.'S REPLACE THE OLD 18" WIDE BOX BK & 1K.

DROP INLET TABLE

MODEL No.	CPC MODEL NAME	A		B		C	
		IN	MM	IN	MM	IN	MM
CP1212	EK	12	300	12	300	4	100
CP1818	CK	18	450	18	450	5	125
CP1824	1K*	18	450	24	600	5	125
CP2424	2K	24	600	24	600	5	125
CP2430	3K	24	600	30	750	5	125
CP3030	5K	30	750	30	750	6	150
CP2436	1L	24	600	36	900	6	150
CP3636	1M	36	900	36	900	6	150
CP2448	3L	24	600	48	1200	6	150
CP3648	3M	36	900	48	1200	6	150
CP4848	1R	48	1200	48	1200	6	150

2 C3.01 **CENTRAL PRECAST CATCH BASIN DETAIL**
NTS

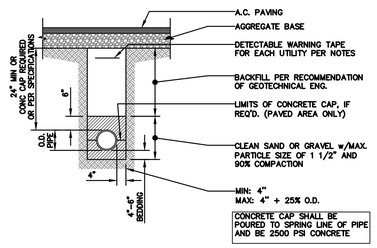

3 C3.01 **PIPELINE BACKFILL**
NTS

SAN RAFAEL CITY SCHOOLS

310 Nova Albion Way
San Rafael, CA 94903 415.492.3200

Terra Linda High School Modernization

310 Nova Albion Way
San Rafael, CA 94903
415.492.3200

Date	Issued For
1/17/2020	Design Development

CIVIL ENGINEER
CLARK CIVIL ENGINEERING
12700 HIGHWAY ONE,
POINT REYES STATION, CA 94956
TEL. (415) 295-4450
FAX (510) 372-0259
CCE PROJECT NO. 217039

HED
417 Montgomery Street
Suite 400
San Francisco, California
94104 USA

(415) 981-2345

WWW.HED.DESIGN

© 2019

DETAILS

C3.01

Construction Best Management Practices (BMPs)

Construction projects are required to implement the stormwater best management practices (BMP) on this page, as they apply to your project, all year long.

Materials & Waste Management

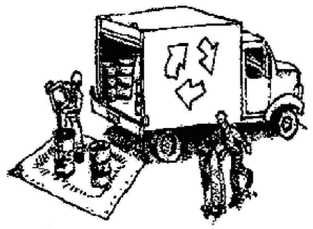

Non-Hazardous Materials

- ❑ Berm and cover stockpiles of sand, dirt or other construction material with tarps when rain is forecast or if not actively being used within 14 days.
- ❑ Use (but don't overuse) reclaimed water for dust control.

Hazardous Materials

- ❑ Label all hazardous materials and hazardous wastes (such as pesticides, paints, thinners, solvents, fuel, oil, and antifreeze) in accordance with city, county, state and federal regulations.
- ❑ Store hazardous materials and wastes in water tight containers, store in appropriate secondary containment, and cover them at the end of every work day or during wet weather or when rain is forecast.
- ❑ Follow manufacturer's application instructions for hazardous materials and be careful not to use more than necessary. Do not apply chemicals outdoors when rain is forecast within 24 hours.
- ❑ Arrange for appropriate disposal of all hazardous wastes.

Waste Management

- ❑ Cover waste disposal containers securely with tarps at the end of every work day and during wet weather.
- ❑ Check waste disposal containers frequently for leaks and to make sure they are not overfilled. Never hose down a dumpster on the construction site.
- ❑ Clean or replace portable toilets, and inspect them frequently for leaks and spills.
- ❑ Dispose of all wastes and debris properly. Recycle materials and wastes that can be recycled (such as asphalt, concrete, aggregate base materials, wood, gyp board, pipe, etc.)
- ❑ Dispose of liquid residues from paints, thinners, solvents, glues, and cleaning fluids as hazardous waste.

Construction Entrances and Perimeter

- ❑ Establish and maintain effective perimeter controls and stabilize all construction entrances and exits to sufficiently control erosion and sediment discharges from site and tracking off site.
- ❑ Sweep or vacuum any street tracking immediately and secure sediment source to prevent further tracking. Never hose down streets to clean up tracking.

Equipment Management & Spill Control

Maintenance and Parking

- ❑ Designate an area, fitted with appropriate BMPs, for vehicle and equipment parking and storage.
- ❑ Perform major maintenance, repair jobs, and vehicle and equipment washing off site.
- ❑ If refueling or vehicle maintenance must be done onsite, work in a bermed area away from storm drains and over a drip pan big enough to collect fluids. Recycle or dispose of fluids as hazardous waste.
- ❑ If vehicle or equipment cleaning must be done onsite, clean with water only in a bermed area that will not allow rinse water to run into gutters, streets, storm drains, or surface waters.
- ❑ Do not clean vehicle or equipment onsite using soaps, solvents, degreasers, steam cleaning equipment, etc.

Spill Prevention and Control

- ❑ Keep spill cleanup materials (rags, absorbents, etc.) available at the construction site at all times.
- ❑ Inspect vehicles and equipment frequently for and repair leaks promptly. Use drip pans to catch leaks until repairs are made.
- ❑ Clean up spills or leaks immediately and dispose of cleanup materials properly.
- ❑ Do not hose down surfaces where fluids have spilled. Use dry cleanup methods (absorbent materials, cat litter, and/or rags).
- ❑ Sweep up spilled dry materials immediately. Do not try to wash them away with water, or bury them.
- ❑ Clean up spills on dirt areas by digging up and properly disposing of contaminated soil.
- ❑ Report significant spills immediately. You are required by law to report all significant releases of hazardous materials, including oil. To report a spill: 1) Dial 911 or your local emergency response number, 2) Call the Governor's Office of Emergency Services Warning Center, (800) 852-7550 (24 hours).

Earthwork & Contaminated Soils

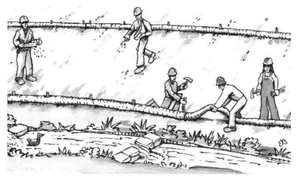

Erosion Control

- ❑ Schedule grading and excavation work for dry weather only.
- ❑ Stabilize all denuded areas, install and maintain temporary erosion controls (such as erosion control fabric or bonded fiber matrix) until vegetation is established.
- ❑ Seed or plant vegetation for erosion control on slopes or where construction is not immediately planned.

Sediment Control

- ❑ Protect storm drain inlets, gutters, ditches, and drainage courses with appropriate BMPs, such as gravel bags, fiber rolls, berms, etc.
- ❑ Prevent sediment from migrating offsite by installing and maintaining sediment controls, such as fiber rolls, silt fences, or sediment basins.
- ❑ Keep excavated soil on the site where it will not collect into the street.
- ❑ Transfer excavated materials to dump trucks on the site, not in the street.
- ❑ Contaminated Soils
- ❑ If any of the following conditions are observed, test for contamination and contact the Regional Water Quality Control Board:
  - ■ Unusual soil conditions, discoloration, or odor.
  - ■ Abandoned underground tanks.
  - ■ Abandoned wells
  - ■ Buried barrels, debris, or trash.

Paving/Asphalt Work

- ❑ Avoid paving and seal coating in wet weather, or when rain is forecast before fresh pavement will have time to cure.
- ❑ Cover storm drain inlets and manholes when applying seal coat, tack coat, slurry seal, fog seal, etc.
- ❑ Collect and recycle or appropriately dispose of excess abrasive gravel or sand. Do NOT sweep or wash it into gutters.
- ❑ Do not use water to wash down fresh asphalt concrete pavement.

Sawcutting & Asphalt/Concrete Removal

- ❑ Completely cover or barricade storm drain inlets when saw cutting. Use filter fabric, catch basin inlet filters, or gravel bags to keep slurry out of the storm drain system.
- ❑ Shovel, abosorb, or vacuum saw-cut slurry and dispose of all waste as soon as you are finished in one location or at the end of each work day (whichever is sooner!).
- ❑ If sawcut slurry enters a catch basin, clean it up immediately.

Concrete, Grout & Mortar Application

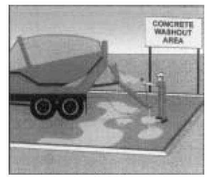

- ❑ Store concrete, grout and mortar under cover, on pallets and away from drainage areas. These materials must never reach a storm drain.
- ❑ Wash out concrete equipment/trucks offsite or in a contained area, so there is no discharge into the underlying soil or onto surrounding areas. Let concrete harden and dispose of as garbage.
- ❑ Collect the wash water from washing exposed aggregate concrete and remove it for appropriate disposal offsite.

Dewatering

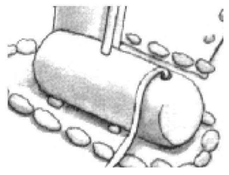

- ❑ Effectively manage all run-on, all runoff within the site, and all runoff that discharges from the site. Divert run-on water from offsite away from all disturbed areas or otherwise ensure compliance.
- ❑ When dewatering, notify and obtain approval from the local municipality before discharging water to a street gutter or storm drain. Filtration or diversion through a basin, tank, or sediment trap may be required.
- ❑ In areas of known contamination, testing is required prior to reuse or discharge of groundwater. Consult with the Engineer to determine whether testing is required and how to interpret results. Contaminated groundwater must be treated or hauled off-site for proper disposal.

Painting & Paint Removal

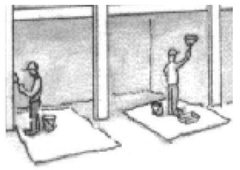

Painting cleanup

- ❑ Never clean brushes or rinse paint containers into a street, gutter, storm drain, or surface waters.
- ❑ For water-based paints, paint out brushes to the extent possible. Rinse to the sanitary sewer once you have gained permission from the local wastewater treatment authority. Never pour paint down a drain.
- ❑ For oil-based paints, paint out brushes to the extent possible and clean with thinner or solvent in a proper container. Filter and reuse thinners and solvents. Dispose of residue and unusable thinner/solvents as hazardous waste.

Paint removal

- ❑ Chemical paint stripping residue and chips and dust from marine paints or paints containing lead or tributyltin must be disposed of as hazardous waste.
- ❑ Paint chips and dust from non-hazardous dry stripping and sand blasting may be swept up or collected in plastic drop cloths and disposed of as trash.

Landscape Materials

- ❑ Contain stockpiled landscaping materials by storing them under tarps when they are not actively being used.
- ❑ Stack erodible landscape material on pallets. Cover or store these materials when they are not actively being used or applied.
- ❑ Discontinue application of any erodible landscape material within 2 days before a forecast rain event or during wet weather.

Storm drain polluters may be liable for fines of up to $10,000 per day!

SAN RAFAEL CITY SCHOOLS
310 Nova Albion Way
San Rafael, CA 94903 415.492.3200

Terra Linda High School Modernization

310 Nova Albion Way
San Rafael, CA 94903
415.492.3200

Date	Issued For
1/17/2020	Design Development

CIVIL ENGINEER
CLARK CIVIL ENGINEERING
12700 HIGHWAY ONE,
POINT REYES STATION, CA 94956
TEL. (415) 295-4450
FAX (510) 372-0259
CCE PROJECT NO. 217039

HED
417 Montgomery Street
Suite 400
San Francisco, California
94104 USA

(415) 981-2345

WWW.HED.DESIGN

© 2019

CONSTRUCTION BEST MANAGEMENT PRACTICES (SWPP)

C4.01

LEGEND

PA		PLANTING AREA AMENDED IN-SITU SOILS PLUS IMPORT TOPSOIL AS REQUIRED TO COMPLETE PROJECT (TYP.)
R		RADIUS
POB		LAYOUT STARTING POINT
SIM		SIMILAR
(TYP.)		TYPICAL
EQ		EQUAL
O.C.		ON CENTER
(E)		EXISTING
		ALIGN
NIC		NOT IN CONTRACT
F.G.		FINISH GRADE
S.A.D.		SEE ARCHITECTURAL DRAWINGS
S.C.D.		SEE CIVIL DRAWINGS
S.S.D.		SEE STRUCTURAL DRAWINGS
S.E.D.		SEE ELECTRICAL DRAWINGS
N.T.E.		NOT TO EXCEED
(L.O.W.)		LIMIT OF WORK
CJ		EXPANSION CONSTRUCTION JOINT IN WALLS
S		SCORE JOINT IN WALLS
N		NOTCH IN WALLS
	AD	AREA DRAIN. S.C.D.
	CO	CLEAN OUT. S.C.D.
		TRENCH DRAIN. S.C.D.
		VALVE, S.C.D.
	EJ	EXPANSION JOINT IN PAVING
	SJ	SCORED OR SAWCUT JOINT IN PAVING
MFR		MANUFACTURER
W		WHEELCHAIR SPACE 36"x48"

COLOR A CONCRETE PAVING (TYP.) — 1 / LC-501
SCOFIELD MESA BEIGE C-12
GRACE TOPCAST SANDBLAST 05
SEE SPECS.
SUBMIT SAMPLE FOR ACCEPTANCE.

COLOR B CONCRETE PAVING (TYP.) — 1 / LC-501
SCOFIELD FRENCH GRAY C-14
GRACE TOPCAST SANDBLAST 05
SEE SPECS.
SUBMIT SAMPLE FOR ACCEPTANCE.

CONCRETE LANDSCAPE WALL (TYP.) — 2-4 / LC-501
E N
NATURAL COLORED CONCRETE,
SMOOTH SACK FINISH WITH
GRINDERMINDER STAINLESS STEEL
SKATE AND BIKE DETERRENT FROM
GRIND-TO-A-HALT 630-365-2375 @ 30"o.c.
OR AS SHOWN ON PLAN AND AS
DETAILED. SEE PLAN FOR EXPANSION
(E) AND SCORE JOINT (N) LOCATIONS.

TABLE - 2 ADA , 4 STANDARD — 9 / LC-501
MFR: MM CITE
REP: DAVID YOSSO, SPECPLAY
MOBILE 650 863-5006
David@SpecPlay.com

MODEL: STANDARD TABLE: TBL421
TABLY, DISASSEMBLED 6' PARK TABLE,
STEEL RECTANGULAR PROFILES TABLE TOP,
RECTANGULAR LEGS, SURFACE MOUNTED,
STANDARD RAL COLOR

ADA TABLE: TBL421 ADA
TABLY, DISASSEMBLED 6' PARK TABLE,
STEEL RECTANGULAR PROFILES TABLE TOP,
RECTANGULAR LEGS, SURFACE MOUNTED,
STANDARD RAL COLOR

BENCHES FOR TABLES: VERA #LV211,
DISASSEMBLED 6' BENCH WITH STEEL SEAT AND
ROUNDS AND MODIFIED ADA VERSION, SURFACE MOUNTED
STANDARD RAL COLOR

NOTE: SUBMIT COLOR CHARTS AND MANUFACTURER'S CUT SHEETS FOR REVIEW AND ACCEPTANCE BY LANDSCAPE ARCHITECT.
COORDINATE WITH ELECTRICAL FOR POWER

TRASH RECEPTACLE - 4 TOTAL — 8 / LC-501
MFR: DUMOR, INC.
REP.: JON BAWDEN, ROSS RECREATION, INC.
707-736-6890

MODEL: 286-32SH, 32 GALLON STEEL RECEPTACLE WITH SHIELD, TOP DEPOSIT, SIDE OPENING WITH LINER INSERT. ARGENTO COLOR POWDER COATING

MOUNTING: SURFACE MOUNT. INSTALL PER MANUFACTURER'S INSTRUCTIONS. SEE SPECS.

COLOR: STANDARD ARGENTO

NOTE: SUBMIT COLOR CHARTS AND MANUFACTURER'S CUT SHEETS FOR REVIEW AND ACCEPTANCE BY LANDSCAPE ARCHITECT.

RECYCLE RECEPTACLE - 4 TOTAL — 7 / LC-501
MFR: DUMOR, INC.
REP.: JON BAWDEN, ROSS RECREATION, INC.
707-736-6890

MODEL: 434-72, 72 GALLON RECYCLING UNIT, TOP DEPOSIT, 3 STREAM, DOUBLE SIDE OPENING WITH LINER INSERT AND COLORED TOPS

MOUNTING: SURFACE MOUNT. INSTALL PER MANUFACTURER'S INSTRUCTIONS. SEE SPECS.

COLOR: STANDARD ARGENTO

NOTE: SUBMIT COLOR CHARTS AND MANUFACTURER'S CUT SHEETS FOR REVIEW AND ACCEPTANCE BY LANDSCAPE ARCHITECT.

SHADE STRUCTURE - 3 TOTAL — - -
MFR: USA SHADE & FABRIC STRUCTURES P.C. 04-118151
REP: ERIK ANSLINGER
(408) 478-1646 - M
(800) 966-5005 - TF
eanslinger@usa-shade.com

MODEL: DSA 1032020-16, 20' x 20' x 12' SINGLE POST PYRAMID UNIT

MOUNTING: PER DSA APPROVED STRUCTURAL DRAWING

COLOR: SHADE TO BE BLUE STANDARD COLOURSHADE FR FABRIC, POSTS AND FRAME TO BE TELE-GRAY POWDER COATING

NOTE: SUBMIT COLOR CHARTS AND DSA STAMPED DRAWINGS FOR REVIEW AND ACCEPTANCE BY LANDSCAPE ARCHITECT.

TREE GRATE, FRAME - 8 TOTAL — 5 / LC-501
MFR: URBAN ACCESSORIES
(877) 487-0488
MODEL: FLAT RAINBOW
SIZE: 5'-0" ROUND
MAT'L: CAST IRON
INSTALL: FLUSH TO SURROUNDING PAVING
INSTALL PER MANUFACTURER'S SPECIFICATIONS

GENERAL NOTES

1. STANDARD PLANS AND SPECIFICATIONS: CONSTRUCTED IN ACCORDANCE WITH THESE PLANS, SAN RAFAEL CITY SCHOOLS STANDARD PLANS AND THE PROJECT SPECIFICATIONS, SUBJECT TO INSPECTION AND APPROVAL BY THE DIVISION OF THE STATE ARCHITECT
2. NOTWITHSTANDING THE PRESENCE OF A DISTRICT REPRESENATIVE, EITHER FULL OR PART-TIME, THE CONTRACTOR IS NOT RELIEVED OF THE RESPONSIBILITY OF PERFORMING THE WORK IN ACCORDANCE WITH THE PROJECT MANUAL AND PLANS.
3. EXACT FIELD LOCATION FOR NEW IMPROVEMENTS SHALL BE APPROVED THE DISTRICT AND LANDSCAPE ARCHITECT BEFORE CONSTRUCTION.
4. VERIFY: ALL EXISTING CONDITIONS, ELEVATIONS, DIMENSIONS AND CONSTRUCTION IN THE FIELD PRIOR TO BID. IF ANY DISCREPANCIES ARE NOTED, THE CONTRACTOR SHALL NOTIFY THE DISTRICT AND LANDSCAPE ARCHITECT IMMEDIATELY FOR DIRECTION.
5. UNDERGROUND SERVICE ALERT: CONTRACTOR SHALL NOTIFY UNDERGROUND SERVICE ALERT AT 800-227-2600 / 811 FOR EXISTING UTILITY LOCATIONS.
6. UNDERGROUND FACILITIES: UTILITY FACILITIES, IF SHOWN ON THE PLANS, IS APPROXIMATE ONLY. CONTRACTOR SHALL CONTACT THE RESPECTIVE UTILITY COMPANY TO OBTAIN INFORMATION REGARDING THE EXACT DEPTH OF BURIAL AND HORIZONTAL LOCATION OF UTILITY LINES AS NECESSARY.
7. PRIOR TO PERFORMING UNDERGROUND CONSTRUCTION, THE CONTRACTOR SHALL MAKE THE NECESSARY PROBES TO IDENTIFY AREAS OF POSSIBLE CONFLICT WITH PROPOSED CONSTRUCTION AS NEEDED. CONTRACTOR SHALL EXCAVATE TO DETERMINE TYPES, EXTENT, SIZE AND DEPTHS OF UNDERGROUND UTILITIES.
8. IT SHALL BE THE RESPONSIBILITY OF THE CONTRACTOR TO COORDINATE ALL NECESSARY UTILITY RELOCATIONS AND ADJUSTMENTS WITH THE APPROPRIATE UTILITY COMPANIES.
9. UTILITY REPAIR: CONTRACTOR SHALL REPAIR ANY DAMAGE OR INTERRUPTION OF UTILITIES, WATER LINES OR IRRIGATION SYSTEMS WITHIN 48 HOURS OF THE TIME OF DAMAGE.
10. NOTICE TO PROCEED: CONTRACTOR SHALL NOT COMMENCE WORK UNTIL AFTER A PRE-CONSTRUCTION MEETING HAS BEEN HELD WITH THE CITY, AND AFTER A NOTICE TO PROCEED HAS BEEN ISSUED BY THE CITY.
11. ALL WORK SHALL BE DONE IN ACCORDANCE WITH GEOTECHNICAL REPORTS AND WITHIN PROJECT MANUAL.

LAYOUT NOTES

1. CONTRACTOR SHALL VERIFY ALL GRADES, EXISTING CONDITIONS AND DIMENSIONS IN THE FIELD PRIOR TO COMMENCING WORK. ALL DISCREPANCIES OR QUESTIONS SHALL BE BROUGHT TO THE ATTENTION OF THE CIVIL ENGINEER OR LANDSCAPE ARCHITECT FOR RESOLUTION.
2. ALL CURVES AND ALL TRANSITIONS BETWEEN CURVES AND STRAIGHT EDGES SHALL BE SMOOTH.
3. SEE IRRIGATION PLANS FOR LOCATION OF EXISTING AND PROPOSED IRRIGATION PIPING; SLEEVES TO ACCOMMODATE IRRIGATION PIPING IN MOST CASES EXISTING BUT WILL NEED TO BE LOCATED IN THE FIELD, SEE IRRIGATION PLAN, SHALL BE IN PLACED UNDER AND THROUGH PAVING PRIOR TO POURING.
4. TAKE ALL DIMENSIONS FROM FACE OF CURB, WALL OR BUILDING OR TO CENTERLINE OF COLUMNS OR POSTS UNLESS OTHERWISE NOTED. ALL DIMENSIONS CALLED OUT AS "EQUAL" ARE EQUIDISTANT MEASUREMENTS TO DESIGNATED CENTERLINE(S).
5. TAKE ALL DIMENSIONS PERPENDICULAR TO ANY REFERENCE LINE, WORK LINE, FACE OF BUILDING: FACE OF WALL, OR CENTERLINE.
6. ALL ANGLES TO BE 90 DEGREES AND ALL LINES OF PAVING AND FENCING TO BE PARALLEL UNLESS NOTED OTHERWISE. MAINTAIN HORIZONTAL ALIGNMENT OF ADJACENT ELEMENTS AS NOTED ON THE DRAWINGS.
7. REFERENCE TO NORTH REFERS TO TRUE NORTH. REFERENCE TO SCALE IS FOR FULL-SIZED DRAWINGS ONLY. DO NOT SCALE FROM REDUCED DRAWINGS.
8. DIMENSIONS TAKE PRECEDENCE OVER SCALES SHOWN ON DRAWINGS.
9. VERIFY LOCATION OF ALL VAULTS, ELECTRICAL DUCT BANKS, MANHOLES, CONDUIT AND PIPING, DRAINAGE STRUCTURES AND OTHER UTILITIES WITH THE APPROPRIATE ENGINEERING DRAWINGS. INFORM CIVIL ENGINEER AND LANDSCAPE ARCHITECT OF CONFLICTS AND REDIRECT WORK TO AVOID DELAYS.
10. S.C.D. FOR ALL GRADES AND UTILITY LAYOUTS.

SR
310 Nova Albion Way
San Rafael, CA 94903 415.492.3200

Terra Linda High School Modernization

310 Nova Albion Way
San Rafael, CA 94903
415.492.3200

Date	Issued For
12/11/2019	Schematic Design
01/22/2020	DSA Submittal

VALLIER DESIGN ASSOCIATES INC.
LANDSCAPE ARCHITECTURE PLANNING DESIGN
210 WASHINGTON AVENUE, SUITE G
POINT RICHMOND, CA 94801
TELEPHONE 510.237.7745 FACSIMILE 510.237.5751

HED
417 Montgomery Street
Suite 400
San Francisco, California
94104 USA
(415) 981-2345
WWW.HED.DESIGN

© 2019

Legend and Notes

L-000

LAYOUT PLAN

0 5 10 20

NORTH

CONSTRUCTION PLAN

0 5 10 20

NORTH

310 Nova Albion Way
San Rafael, CA 94903 415.492.3200

Terra Linda High School Modernization

310 Nova Albion Way
San Rafael, CA 94903
415.492.3200

Date	Issued For
12/11/2019	Schematic Design
01/22/2020	DSA Submittal

VALLIER DESIGN ASSOCIATES INC.
LANDSCAPE ARCHITECTURE PLANNING DESIGN
210 WASHINGTON AVENUE, SUITE G
POINT RICHMOND, CA 94801
TELEPHONE 510.237.7745 FACSIMILE 510.237.5751

HED
417 Montgomery Street
Suite 400
San Francisco, California
94104 USA
(415) 981-2345
WWW.HED.DESIGN

© 2019

Construction Plan

LC-101

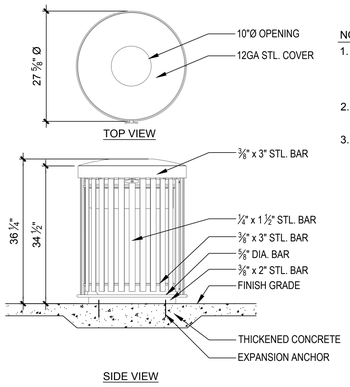

NOTES:

1. ALL STL. MEMBERS COATED W/ ZINC RICH EPOXY THEN FINISHED W/ POLYESTER POWDER COATING.
2. ½" x 3 ¾" EXPANSION ANCHOR BOLTS PROVIDED (QTY. 3)
3. RECYCLING UNIT HINGE FOR REMOVAL OF 32 GAL. LINER.

8 TRASH RECEPTACLE

NOT TO SCALE

NOTES:

1. ALL STL. MEMBERS COATED W/ ZINC RICH EPOXY THEN FINISHED W/ POLYESTER POWDER COATING.
2. ½" x 3 ¾" EXPANSION ANCHOR BOLTS PROVIDED (QTY. 4)
3. ENDS OF RECYCLING UNIT HINGE FOR REMOVAL OF LINER.

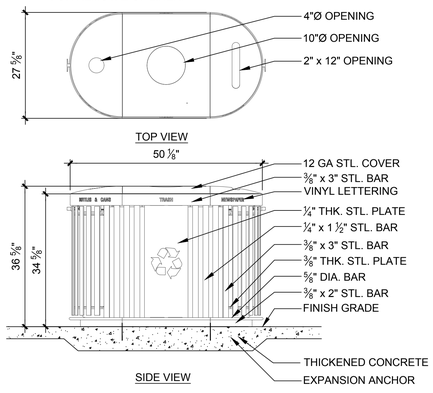

7 RECYCLE RECEPTACLE

NOT TO SCALE

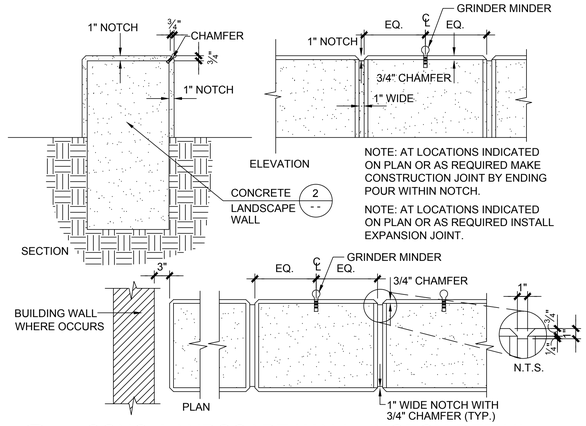

4 CONC. LANDSCAPE WALL - NOTCH DETAIL

SCALE: NOT TO SCALE

NOTES:

1. FOR CURBS USE TWO SLIP JOINTS 3" CLR. FROM EDGES (TYP.)
2. EXPANSION JOINT WHERE PAVING MEETS WALLS AND BUILDING.
3. SEE SOIL MANAGEMENT FOR ALL EXCAVATION, SUB BASE AND CONCRETE RECOMMENDATIONS.
4. S.C.D. FOR FINISH GRADE.
5. WHERE NEW PAVEMENT MEETS EXISTING OR EARLIER POUR, DOWEL INTO CONCRETE 6" DEEP WITH 12" #4 REBAR @ 18"o.c. INSTALL EXPANSION JOINT AND POUR NEW.
6. EXPANSION JOINTS TO RECEIVE SLIP DOWELS. S.S.D.

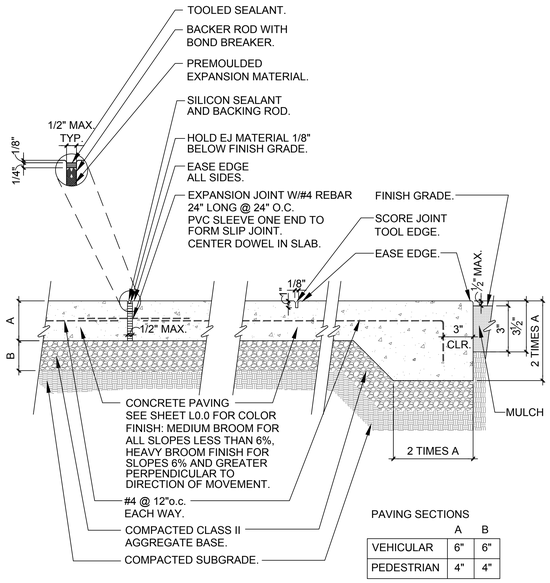

PAVING SECTIONS

	A	B
VEHICULAR	6"	6"
PEDESTRIAN	4"	4"

1 CONCRETE PAVING

NOT TO SCALE

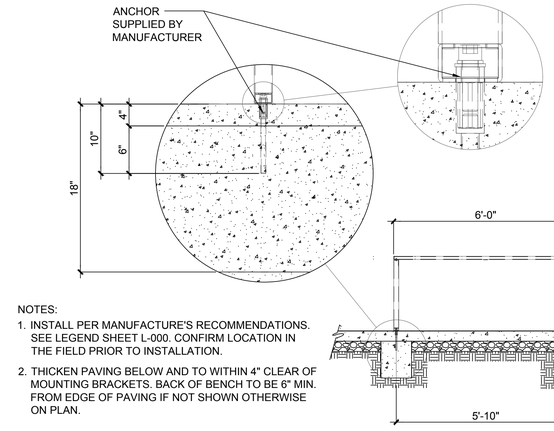

NOTES:

1. INSTALL PER MANUFACTURE'S RECOMMENDATIONS. SEE LEGEND SHEET L-000. CONFIRM LOCATION IN THE FIELD PRIOR TO INSTALLATION.
2. THICKEN PAVING BELOW AND TO WITHIN 4" CLEAR OF MOUNTING BRACKETS. BACK OF BENCH TO BE 6" MIN. FROM EDGE OF PAVING IF NOT SHOWN OTHERWISE ON PLAN.

9 TABLE STANDARD AND (ADA SIM.)

NOT TO SCALE

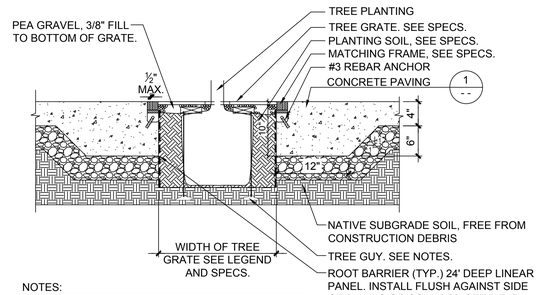

NOTES:

1. INSTALL GRATE AND FRAME PER MFR'S SPECIFICATIONS; GRATE AND FRAME SHALL BE FLUSH TO SURROUNDING PAVING.
2. TREES IN GRATE SHALL BE GUYED USING DUCKBILL ROOTBALL SYSTEM OR FIXING KIT. SIZE AS REQUIRED. INSTALL PER MFR'S SPECIFICATIONS.
3. ROUND GRATE - SQUARE OFF SIDES OF PLANT PIT TO THE WIDTH OF THE GRATE DIA. AND INSTALL BARRIER FLUSH WITH THE EDGE OF PLANT PIT. SEE TREE PLANTING DETAIL, 1/LI-503, SIM.

5 TREE GRATE

NOT TO SCALE

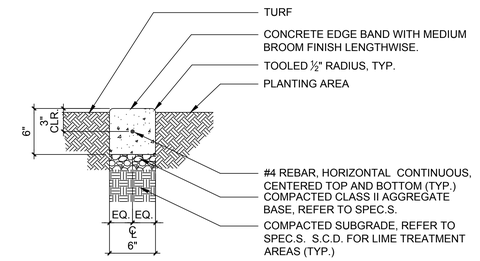

NOTES:

1. INSTALL EXPANSION JOINTS AT ALL CORNERS, BEGINNINGS, AND ENDINGS OF RADII, AND AT ALL FENCE POSTS.
2. INSTALL SCORE JOINTS AT 5'-0" O.C. EXPANSION JOINT EVER 4TH SCORE.

6 CONCRETE HEADER

SCALE: 1 1/2" = 1'-0"

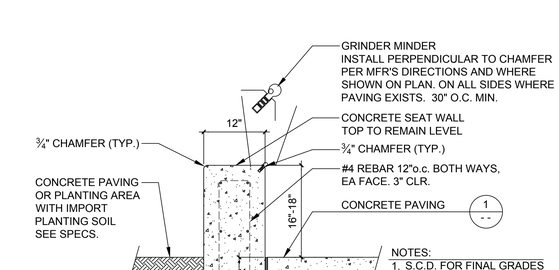

NOTES:

1. S.C.D. FOR FINAL GRADES
2. DOWEL INTO ADJACENT PAVING WITH #4 REBAR, 15" LONG @ 24"o.c. PVC SLEEVE IN PAVING TO FORM SLIP DOWEL IN SLAB.
3. ALL VISIBLE CONCRETE FINISH TO BE SMOOTH SACK FINISH OR APPROVED EQUAL.

2 CONCRETE LANDSCAPE WALL

SCALE: 1" = 1'-0"

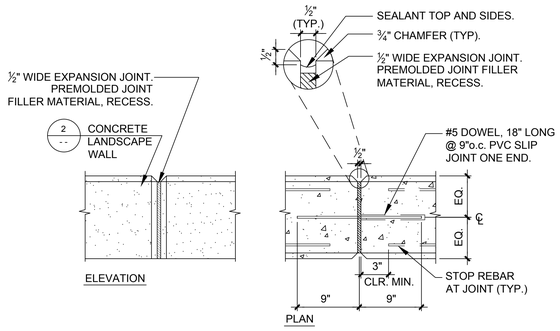

3 CONCRETE LANDSCAPE WALL EXPANSION JOINT DETAIL

SCALE: NOT TO SCALE

SR

310 Nova Albion Way
San Rafael, CA 94903 415.492.3200

Terra Linda High School Modernization

310 Nova Albion Way
San Rafael, CA 94903
415.492.3200

Date	Issued For
12/11/2019	Schematic Design
01/22/2020	DSA Submittal

VALLIER DESIGN ASSOCIATES INC.
LANDSCAPE ARCHITECTURE PLANNING DESIGN
210 WASHINGTON AVENUE, SUITE G
POINT RICHMOND, CA 94801
TELEPHONE 510.237.7745 FACSIMILE 510.237.5751

HED

417 Montgomery Street
Suite 400
San Francisco, California
94104 USA

(415) 981-2345

WWW.HED.DESIGN

© 2019

Construction Details

LC-501

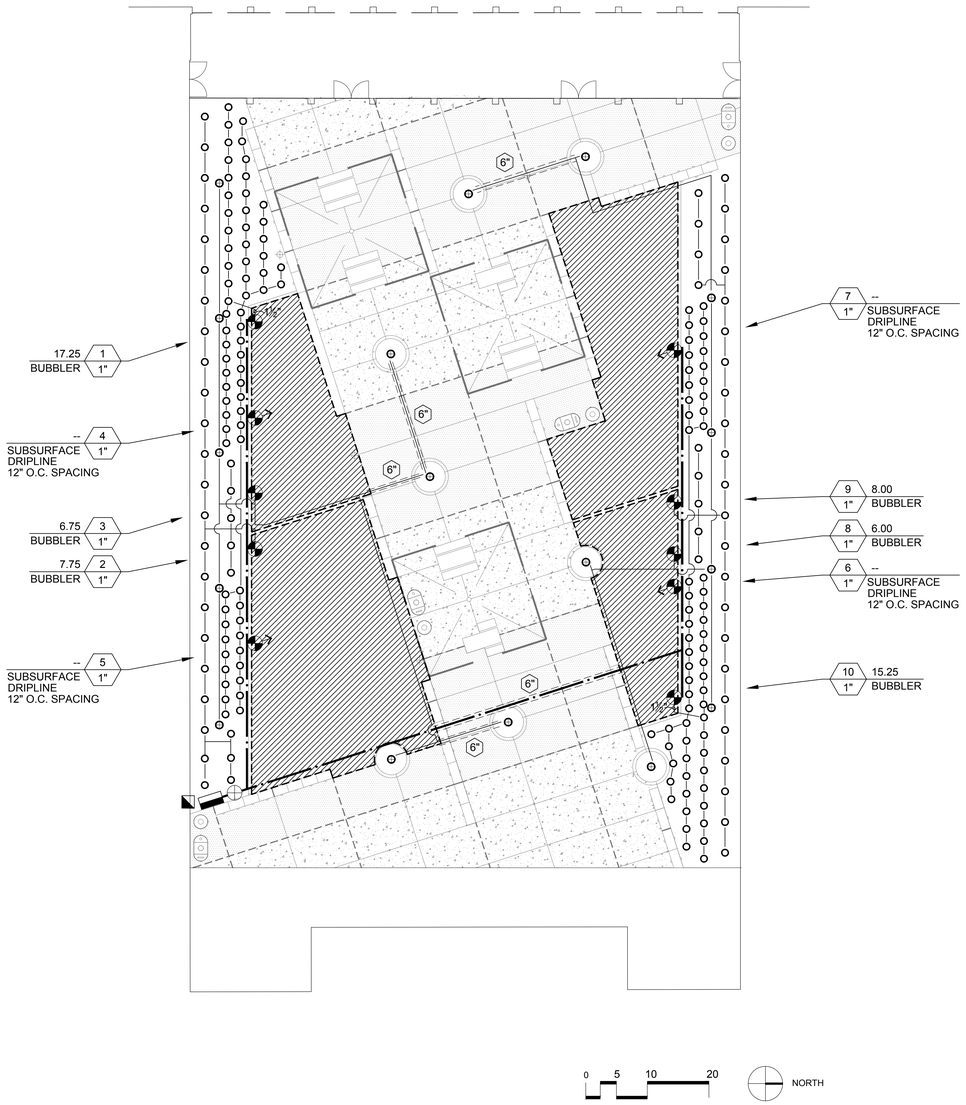

PIPE SIZING SCHEDULE 40 PVC:

1"	0-13 GPM
1¼"	13-23 GPM
1½"	23-32 GPM
2"	32-51 GPM
2 ½"	51-72 GPM
3"	72-111 GPM

IRRIGATION LEGEND:

- FEBCO 880V 3" REDUCED PRESSURE PRINCIPLE BACKFLOW PREVENTER. LOCATE PER PLAN AND AS REQUIRED. INSTALL IN SINGLE SWING BACKFLOW PREVENTER ENCLOSURE BY V.I.T. STRONGBOX, MODEL SBBC-22SS.
- CONTROLLER: RAINMASTER EAGLE PLUS TWO WIRE CONTROLLER WITH 5 YEARS OF i-CENTRAL CELLULAR COMMUNICATION IN A SITEONE GREEN TECH STAINLESS STEEL WALL MOUNT ENCLOSURE. FLOW SENSOR ASSEMBLY WITH SUPERIOR 3300 NORMALLY OPEN MASTER VALVE AND DATA INDUSTRIAL PLASTIC TEE FLOW SENSOR. PROMAX REMOTE AND PERMANENTLY MOUNTED RECEIVER. FOR ORDERING AND CERTIFICATION PLEASE CONTACT NICK MANFRE AT 925.558.5965 SITE ONE GREEN TECH MODEL # SA03-RM2-TW/FSFV-300P/PMR
- SUPERIOR 3300-RW SERIES 3" MASTER CONTROL VALVE – NORMALLY OPEN WITH RAINMASTER FS300P 3" FLOW SENSOR WITH TW-D-1 DECODER. CONNECT FLOW SENSOR TO CONTROLLER A WITH EV-CAB-SEN CABLE IN 1" CONDUIT WITH PULL BOXES EVERY 200' MAX. NO SPLICES ALLOWED.
- TORO P-220S SERIES REMOTE CONTROL VALVE FOR BUBBLER ZONES (SIZE PER PLAN) FITTED WITH ONE TW-D-1 SINGLE STATION DECODER PER VAVLE TO BE COMPATIBLE WITH 2-WIRE CONTROLLER SYSTEM. CONNECT TO CONTROLLER WITH RAINMASTER TW-CAB-14 TWO WIRE CABLE. INSTALL A TW-LA-1 LIGHTING ARRESTOR WITH 8'-0" CONTRACTOR SUPPLIED GROUND ROD ALONG 2-WIRE PATH EVERY 300-FEET MAXIMUM SPACING. CONTRACTOR SHALL BE RESPONSIBLE FOR PROVIDING A GROUND CONNECTION OF 10 ohms OR LESS RESISTANCE TO EARTH GROUND. CONNECT VALVES TO CONTROLLER USING 2-WIRE DIRECT BURY TW-CAB-14 2-WIRE CABLE. ANY SPLICES TO BE MADE SHALL BE SPLICED USING TW-SPLICE-14 WATER TIGHT CONNECTIONS, NO EQUAL. INSTALL IN PURPLE IRRIGATION BOX
- TORO DZK-700 SERIES REMOTE CONTROL VALVE WITH EFF-KIT-60HZ Reclaimed Water Solenoid Kit DRIPLINE ZONES (SIZE PER PLAN) FITTED WITH ONE TW-D-1 SINGLE STATION DECODER PER VAVLE TO BE COMPATIBLE WITH 2-WIRE CONTROLLER SYSTEM. CONNECT TO CONTROLLER WITH RAINMASTER TW-CAB-14 TWO WIRE CABLE. INSTALL A TW-LA-1 LIGHTING ARRESTOR WITH 8'-0" CONTRACTOR SUPPLIED GROUND ROD ALONG 2-WIRE PATH EVERY 300-FEET MAXIMUM SPACING. CONTRACTOR SHALL BE RESPONSIBLE FOR PROVIDING A GROUND CONNECTION OF 10 ohms OR LESS RESISTANCE TO EARTH GROUND. CONNECT VALVES TO CONTROLLER USING 2-WIRE DIRECT BURY TW-CAB-14 2-WIRE CABLE. ANY SPLICES TO BE MADE SHALL BE SPLICED USING TW-SPLICE-14 WATER TIGHT CONNECTIONS, NO EQUAL. INSTALL IN PURPLE IRRIGATION BOX
- GATE VALVE, SIZE SAME AS LINE SIZE, LEEMCO LGT-SS , CLASS 125,T-113. SEE SPEC.S
- EXISTING MAIN LINE
- MAIN LINE: SCHEDULE 40 PVC WITH SCHEDULE 80 SOLVENT-WELD FITTINGS: ALL MAIN LINE 2" UNLESS NOTED ON PLAN.
- LATERAL LINE: SCHEDULE 40 PVC WITH SCHEDULE 80 SOLVENT-WELD FITTINGS: ALL LATERAL LINE 1" UNLESS NOTED ON PLAN.
- STATION NUMBER
  GPM
  VALVE SIZE
- IRRIGATION SLEEVE: SCHEDULE 40 PVC
  SLEEVE SIZE
- TORO 570S/FB-25-PC WITH RW60-KIT Purple Solenoid Assembly, 24 VAC- ONE PER SHRUB, INSTALL WITH PURPLE CAP
- TORO 570S/FB-50-PC WITH RW60-KIT Purple Solenoid Assembly, 24 VAC - THREE PER TREE, (2) IN TUBE AND (1) ON GRADE, INSTALL WITH PURPLE CAP
- AREA OF SUBSURFACE DRIPLINE, TORO DL2000-E SERIES DRIPLINE, 12" EMITTER SPACING, 12" ON CENTER LINE SPACING. SEE DETAIL SHEET LI-502
- FLOW SENSOR CABLE. CONNECT CONTROLLER TO FLOW SENSOR WITH RAINMASTER SENSOR CABLE EV-CAB-SEN TWO-WIRE CABLE IN 1" CONDUIT WITH PULL BOXES EVERY 200' MAXIMUM. NO SPLICES IN WIRE ALLOWED.
- CHRISTY 36 UTILITY BOX WITH REINFORCED CONCRETE LID AND ASSOCIATED MATERIALS AT SLEEVE JUNCTION/CHANGES IN DIRECTIONS AND STUB OUT LOCATIONS (TYP.)
- QUICK COUPLING VALVE, RAINBIRD 44 NP WITH PURPLE LOCKING COVER INSTALL IN PURPLE BOX

IRRIGATION NOTES:

1. CONTACT LANDSCAPE ARCHITECT AND COORDINATE ALL REVIEWS PRIOR TO COMMENCEMENT OF WORK.
2. DUE TO THE SCALE OF THE DRAWINGS IT IS NOT POSSIBLE TO INDICATE ALL OFFSETS, FITTINGS, SLEEVES, ETC. INVESTIGATE THE FINISHED CONDITIONS AFFECTING ALL OF IRRIGATION WORK AND PLAN THE WORK ACCORDINGLY, FURNISHING SUCH FITTINGS, ETC,. AS MAY BE REQUIRED TO MEET SUCH CONDITIONS. DRAWINGS ARE GENERALLY DIAGRAMMATIC AND INDICATIVE OF THE WORK TO BE INSTALLED. INSTALL WORK IN SUCH A MANNER AS TO AVOID CONFLICTS BETWEEN IRRIGATION SYSTEM, PLANTING, AND ARCHITECTURAL FEATURES.
3. EXERCISE EXTREME CARE IN EXCAVATION AND WORKING NEAR EXISTING UTILITIES. VERIFY THE LOCATION AND CONDITION OF ALL UTILITIES. REPAIR ANY DAMAGE TO EXISTING UTILITIES OR ADJACENT PROPERTIES CAUSED BY OR DURING THE PERFORMANCE OF WORK AT NO ADDITIONAL COST TO THE CITY. FIELD ADJUST SPRINKLER LOCATIONS SO AS TO AVOID CONFLICTS WITH UTILITIES.
4. THE FINAL LOCATION AND EXACT POSITIONING OF THE AUTOMATIC CONTROLLER AND VALVES SHALL BE APPROVED BY THE LANDSCAPE ARCHITECT PRIOR TO INSTALLATION.
5. DO NOT WILLFULLY INSTALL THE IRRIGATION SYSTEM AS SHOWN ON THE DRAWINGS WHEN IT IS OBVIOUS IN THE FIELD THAT WIND CONDITIONS, OBSTRUCTIONS, GRADE DIFFERENCES OR DIFFERENCES IN THE AREA'S DIMENSIONS EXIST THAT MIGHT NOT HAVE BEEN CONSIDERED IN THE DESIGN. BRING SUCH OBSTRUCTIONS OR DIFFERENCES TO THE ATTENTION OF THE LANDSCAPE ARCHITECT. IN THE EVENT THAT THIS NOTIFICATION IS NOT PERFORMED, THE CONTRACTOR SHALL ASSUME FULL RESPONSIBILITY AND COSTS FOR ALL NECESSARY REVISIONS.
6. THE IRRIGATION SYSTEM DESIGN IS BASED UPON 65 PSI THE MINIMUM WORKING WATER PRESSURE AT 40 GPM THE MAXIMUM GALLONS PER MINUTE. VERIFY THE MINIMUM WORKING WATER PRESSURE AT THE MAXIMUM GALLONS PER MINUTE PRIOR TO BEGINNING CONSTRUCTION. REPORT ANY DIFFERENCE BETWEEN THE MINIMUM WORKING WATER PRESSURE AND THE ACTUAL WORKING WATER PRESSURE AT THE MAXIMUM GALLONS PER MINUTE READING TAKEN AT THE IRRIGATION POINT OF CONNECTION, TO LANDSCAPE ARCHITECT, FOR APPROVAL PRIOR TO PROCEEDING WITH THE IRRIGATION INSTALLATION.
7. PLACE VALVE BOXES 12" FROM AND PARALLEL TO STRUCTURES OR HARDSCAPE. SPACE GROUPED VALVES EQUALLY. ONE VALVE PER BOX. INSTALL IN SHRUB AREAS EXCLUSIVELY. IF NOT POSSIBLE INSTALL IN HARDSCAPE SQUARE WITH SURROUNDING IMPROVEMENTS. USE EQUAL SIZE CHRISTY CONCRETE BOX IF INSTALLED IN HARDSCAPE. SEE SPECS.
8. CONTRACTOR IS RESPONSIBLE FOR COMPLETE COVERAGE. MOVE OR ADD BUBBLERS AND SPRAY HEADS TO INSURE COVERAGE. WHEN ADDING BUBBLERS OR SPRAY HEADS, VERIFY HYDRAULIC REQUIREMENTS.
9. WHERE IT IS NECESSARY TO EXCAVATE ADJACENT TO EXISTING TREES, CONTACT THE OWNER FOR APPROVAL TO BEGINNING WORK. DO NOT TRENCH WITHIN THE DRIP LINE OF TREES UNLESS APPROVED BY LANDSCAPE ARCHITECT OR OWNER'S REPRESENTATIVE. USE ALL POSSIBLE CARE TO AVOID INJURY TO TREES, AND TREE ROOTS. HAND DIG TRENCHES WHERE TWO INCH AND LARGER ROOTS OCCUR. CLOSE TRENCHES ADJACENT TO TREE WITHIN TWENTY-FOUR HOURS: AND WHEN THIS IS NOT POSSIBLE, KEEP THE SIDE OF THE TRENCH SHADED WITH BURLAP OR CANVASS.
10. SEE IRRIGATION SPECIFICATIONS FOR WATER CALCULATIONS AND IRRIGATION SCHEDULE.

SR

310 Nova Albion Way
San Rafael, CA 94903 415.492.3200

Terra Linda High School Modernization

310 Nova Albion Way
San Rafael, CA 94903
415.492.3200

Date	Issued For
12/11/2019	Schematic Design
01/22/2020	DSA Submittal

VALLIER DESIGN ASSOCIATES INC.
LANDSCAPE ARCHITECTURE PLANNING DESIGN
210 WASHINGTON AVENUE, SUITE G
POINT RICHMOND, CA 94801
TELEPHONE 510.237.7745 FACSIMILE 510.237.5751

HED

417 Montgomery Street
Suite 400
San Francisco, California
94104 USA

(415) 981-2345

WWW.HED.DESIGN

© 2019

Irrigation Plan and Legend

LI-101

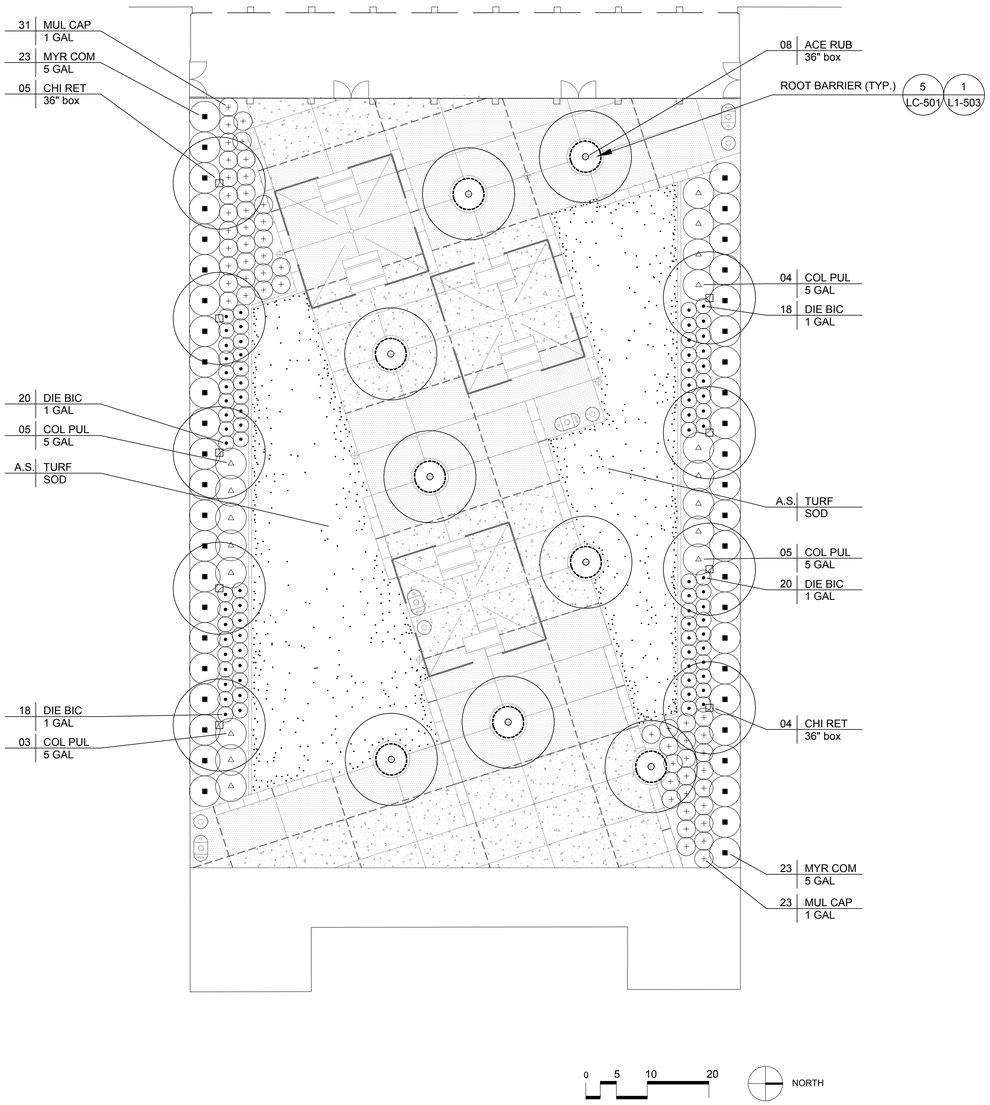

PLANT LIST

ABBREV.	QTY.	SCIENTIFIC NAME / COMMON NAME	SIZE	REMARKS	WATER USE
TREES:					
ACE RUB	08	Acer rubrum 'October Glory' / October Glory Red Maple	36" box	Standard	Moderate
CHI RET	09	Chionanthus retusus / Chinese Fringe Tree	36" box	Standard, Male	Moderate
SHRUBS:					
COL PUL	17	Coleonema pulchellum / Pink Breath of Heaven	5 gal	5'-0" o.c.	Low
DIE BIC	76	Dietes bicolor 'Lemon Drop' / African Iris	1 gal	30" o.c.	Low
MYR COM	46	Myrtus communis 'Compacta Variegata' / Rush	5 gal	5'-0" o.c.	Low
MUL CAP	54	Muhlenbergia capilaris 'Regal Mist' / Pink Muhly	1 gal	3'-0" o.c.	Low
TURF	A.S.	Bluegrass / Rye Sod Mix			

A.S. AREA SHOWN
o.c. ON CENTER

PLANTING NOTES:

1. ALL WORK SHALL BE PERFORMED BY PERSONS FAMILIAR WITH PLANTING WORK AND UNDER THE SUPERVISION OF A QUALIFIED PLANTING FOREMAN.
2. PLANT MATERIAL LOCATIONS SHOWN ARE DIAGRAMMATIC AND MAY BE SUBJECT TO CHANGE IN THE FIELD BY THE LANDSCAPE ARCHITECT BEFORE THE MAINTENANCE PERIOD BEGINS DUE TO UNFORESEEN CONFLICTS.
3. PLANT COUNT AND LEGEND IS FOR THE CONVENIENCE OF THE CONTRACTOR. IN THE CASE OF DISCREPANCIES, THE PLAN SHALL GOVERN.
4. PLANT MATERIAL LOCATIONS ARE TO BE ADJUSTED IN THE FIELD AS NECESSARY AROUND BOXES AND UTILITIES BUT NOT TO BLOCK WINDOWS, PEDESTRIAN SIGHT LINES, NOR IMPEDE ACCESS.
5. CONTRACTOR SHALL VERIFY THE LOCATION OF UNDERGROUND UTILITIES AND BRING CONFLICTS WITH PLANT MATERIAL LOCATIONS TO THE ATTENTION OF THE LANDSCAPE ARCHITECT FOR A DECISION BEFORE PROCEEDING WITH THE WORK.
6. THE LANDSCAPE ARCHITECT RESERVES THE RIGHT TO MAKE SUBSTITUTIONS, ADDITIONS AND DELETIONS IN THE PLANTING SCHEME AS NECESSARY WHILE WORK IS IN PROGRESS. SUCH CHANGES ARE TO BE ACCOMPANIED BY EQUITABLE ADJUSTMENTS IN THE CONTRACT PRICE IF/WHEN NECESSARY.
7. ALL TREES SHALL BE STAKED AS SHOWN IN THE PLANTING AND STAKING DETAIL.

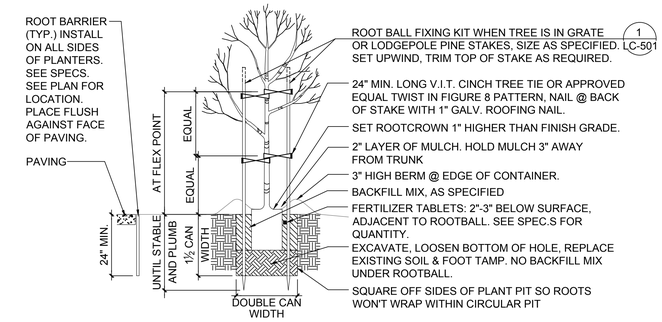

1 TREE PLANTING AND STAKING
NOT TO SCALE

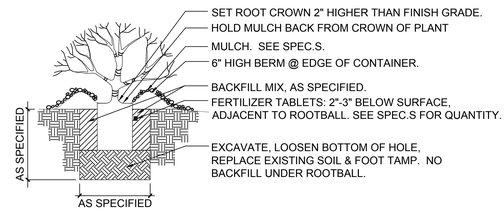

2 SHRUB AND GROUND COVER PLANTING
NOT TO SCALE

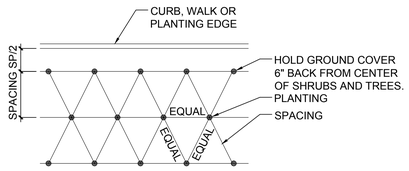

3 GROUND COVER SPACING
NOT TO SCALE

310 Nova Albion Way
San Rafael, CA 94903 415.492.3200

Terra Linda High School Modernization

310 Nova Albion Way
San Rafael, CA 94903
415.492.3200

Date	Issued For
12/11/2019	Schematic Design
01/22/2020	DSA Submittal

VALLIER DESIGN ASSOCIATES INC.
LANDSCAPE ARCHITECTURE PLANNING DESIGN
210 WASHINGTON AVENUE, SUITE G
POINT RICHMOND, CA 94801
TELEPHONE 510.237.7745 FACSIMILE 510.237.5751

HED
417 Montgomery Street
Suite 400
San Francisco, California
94104 USA

(415) 981-2345

WWW.HED.DESIGN

© 2019

Planting Plan and Details

LI-102

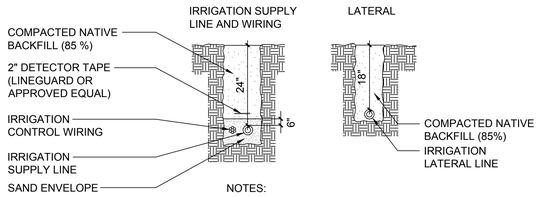

NOTES:
1. BUNDLE AND TAPE WIRE EVERY TEN FEET. LEAVE SLACK AT ALL CHANGES OF DIRECTION.
2. LATERAL LINES IN SEPARATE TRENCH FROM MAIN LINE AND WIRES.
3. PARALLEL LINES MINIMUM 6" APART.
4. TRENCH WIDTH TO ALLOW PROPER SNAKING OF PIPES.
5. INSTALL MIN. 2" SAND BEDDING BENEATH AND MIN. 6" SAND BACKFILL OVER IRRIGATION MAIN LINES.
6. SLEEVE DEPTH - 24" TO TOP OF SLEEVE.

9 TRENCHING
NOT TO SCALE

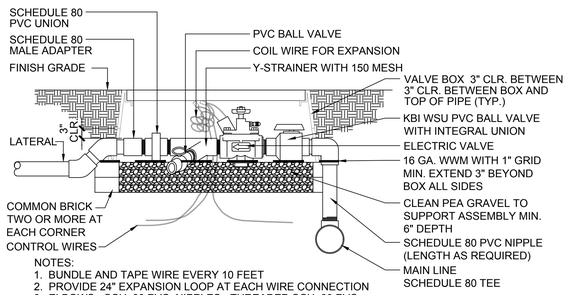

NOTES:
1. BUNDLE AND TAPE WIRE EVERY 10 FEET
2. PROVIDE 24" EXPANSION LOOP AT EACH WIRE CONNECTION
3. ELBOWS - SCH. 80 PVC. NIPPLES - THREADED SCH. 80 PVC
4. WIRE SPLICE KIT (PEN-TIT, 3M #DBY OR APPROVED EQUAL)
5. VALVE BOX (CARSON #1419-12B OR APPROVED EQUAL) SIZE VALVE BOX TO ALLOW FOR EASE OF REPAIR AND/OR REMOVAL OF VALVE AND Y-STAINER. UPSIZE BOX IF REQUIRED.
6. PROVIDE ONE EXTRA CONTROL WIRE TO EACH VALVE

5 REMOTE CONTROL VALVE - BUBBLER
NOT TO SCALE

NOTE: REMOVE ASPHALT OR OTHER PAVING IN ORDER TO INSTALL NEW CONCRETE PAD AROUND BACKFLOW PREVENTER, 6" MIN. CLEAR ALL SIDES.

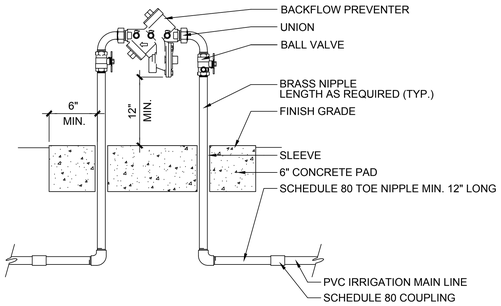

1 BACKFLOW PREVENTER
NOT TO SCALE

TYPICAL PARTS
A - UNDISTURBED SOIL
B - CONCRETE THRUST BLOCK
C - REBAR TO SECURE CONCRETE AND FITTING (TYP.)
D - FITTING (TYP.)
E - PIPE (TYP.)

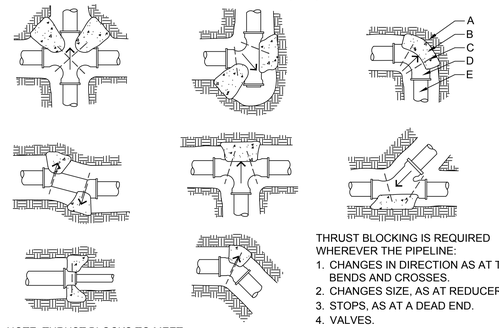

NOTE: THRUST BLOCKS TO MEET NFPA24 SECTION 10.8.2 OF THE 2010 EDITION.

THRUST BLOCKING IS REQUIRED WHEREVER THE PIPELINE:
1. CHANGES IN DIRECTION AS AT TEES, BENDS AND CROSSES.
2. CHANGES SIZE, AS AT REDUCERS.
3. STOPS, AS AT A DEAD END.
4. VALVES.
5. SIZE THRUST BLOCK PER CHART. USE REBAR TO TIE TOGETHER.
6. ALSO SEE DIABLO WATER DISTRICT STANDARD DRAWINGS FOR THRUST BLOCKS DWG 2 AND 3

10 THRUST BLOCKING
NOT TO SCALE

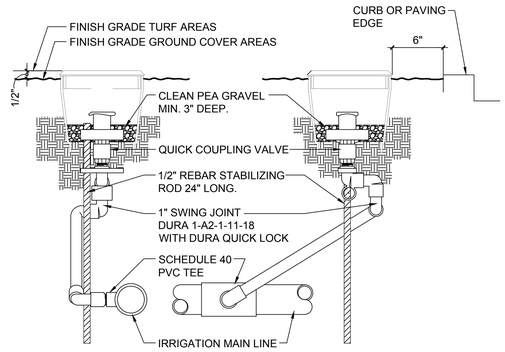

6 QUICK COUPLING VALVE
NOT TO SCALE

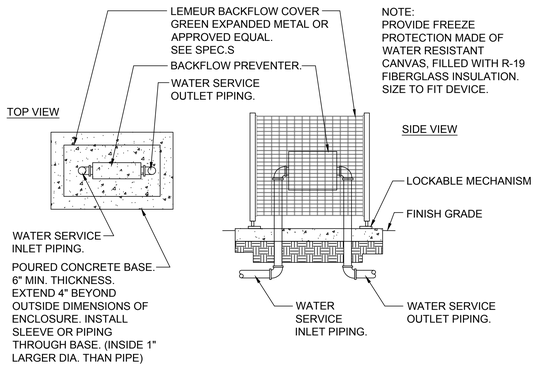

2 BACKFLOW PREVENTER ENCLOSURE
NOT TO SCALE

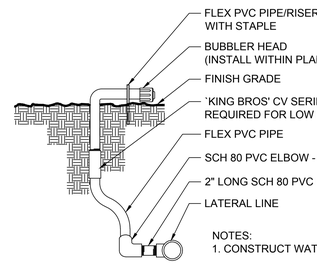

NOTES:
1. CONSTRUCT WATERING BASIN PER PLANTING PLAN.

7 SHRUB BUBBLER
NOT TO SCALE

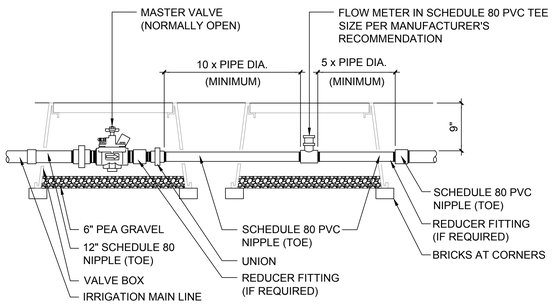

NOTE:
CONNECT MASTER VALVE AND FLOW METER TO CONTROLLER PER MANUFACTURER'S RECOMMENDATIONS IN 1" PVC CONDUIT.

3 MASTER VALVE AND FLOW METER
NOT TO SCALE

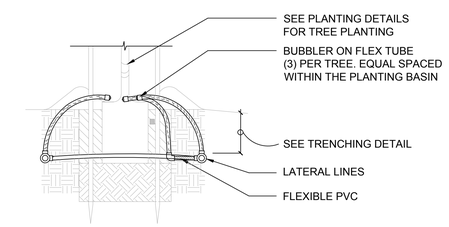

8 BUBBLER ON TREE
NOT TO SCALE

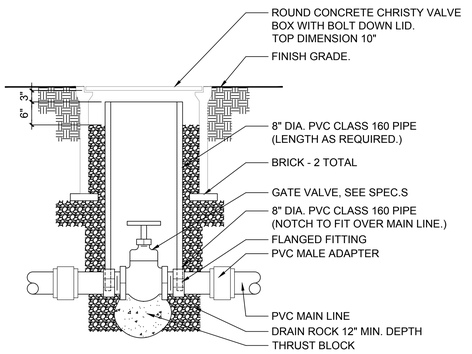

4 GATE VALVE
NOT TO SCALE

SR
310 Nova Albion Way
San Rafael, CA 94903 415.492.3200

Terra Linda High School Modernization

310 Nova Albion Way
San Rafael, CA 94903
415.492.3200

Date	Issued For
12/11/2019	Schematic Design
01/22/2020	DSA Submittal

VALLIER DESIGN ASSOCIATES INC.
LANDSCAPE ARCHITECTURE PLANNING DESIGN
210 WASHINGTON AVENUE, SUITE G
POINT RICHMOND, CA 94801
TELEPHONE 510.237.7745 FACSIMILE 510.237.5751

HED
417 Montgomery Street
Suite 400
San Francisco, California
94104 USA
(415) 981-2345
WWW.HED.DESIGN

© 2019

Irrigation Details

LI-501

NOTES:
1. COORDINATE ALL CONDUIT RUNS THROUGH FOUNDATION FLOOR BEFORE CONCRETE POUR.
2. SEE IRRIGATION LEGEND CALL OUT FOR INCLUDED SATELLITE COMMUNICATION COMPONENTS.
3. SUGGESTED CONDUIT SIZES MAY NEED TO BE LARGER.

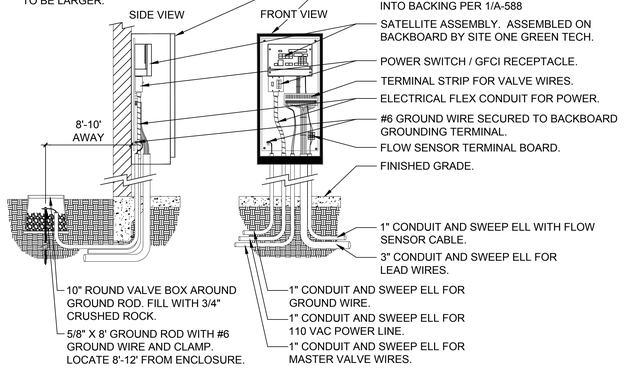

8 CONTROLLER - WALL MOUNT
NOT TO SCALE

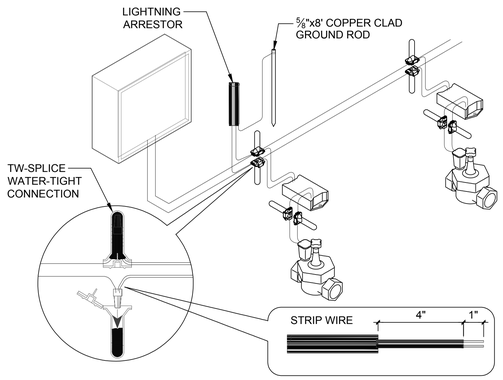

9 2 WIRE SPLICES AND GROUNDING
NOT TO SCALE

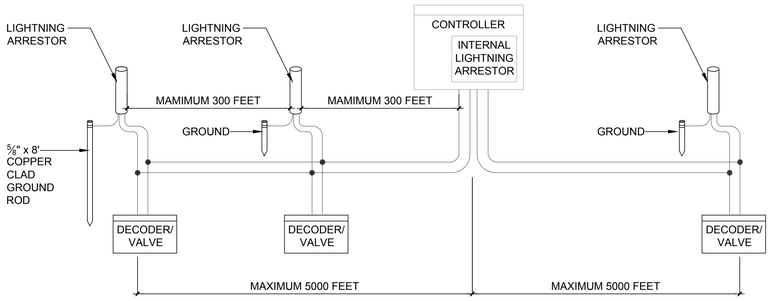

NOTE:
1. WIRE GAUGE TW-CAB-14 MAXIMUM LENGTH 5,000 FEET
2. MAXIMUM 300 FEET BETWEEN LIGHTNING ARRESTORS

10 STRAIGHT LINE CONFIGURATION
NOT TO SCALE

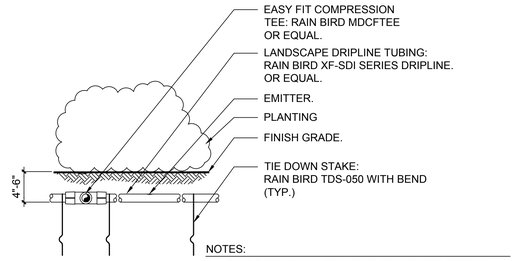

NOTES:
1. PLACE TIE DOWN STAKES EVERY THREE FEET IN SAND, FOUR FEET IN LOAM, AND FIVE FEET IN CLAY.
2. AT FITTINGS WHERE THERE IS A CHANCE OF DIRECTION SUCH AS TEES OR ELBOWS, USE TIE-DOWN STAKES ON EACH LEG OF THE CHANGE OF DIRECTION.
3. INSERTION PLOW AND TRENCHED INSTALLATIONS DO NOT REQUIRED TIE DOWN STAKES.

5 SUB-SURFACE DRIPLINE BURIAL
NOT TO SCALE

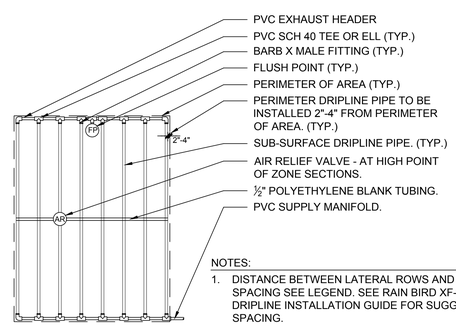

NOTES:
1. DISTANCE BETWEEN LATERAL ROWS AND EMITTER SPACING SEE LEGEND. SEE RAIN BIRD XF-SDI DRIPLINE INSTALLATION GUIDE FOR SUGGESTED SPACING.

6 SUB-SURFACE DRIPLINE END FEED LAYOUT
NOT TO SCALE

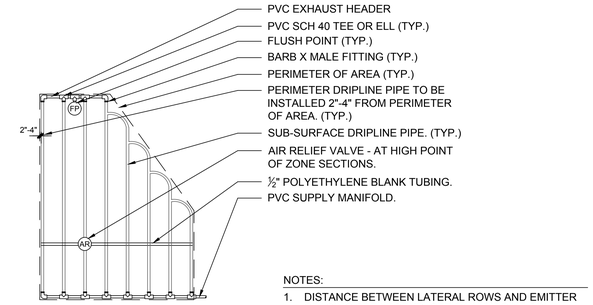

NOTES:
1. DISTANCE BETWEEN LATERAL ROWS AND EMITTER SPACING SEE LEGEND. SEE RAIN BIRD XF-SDI DRIPLINE INSTALLATION GUIDE FOR SUGGESTED SPACING.

7 SUB-SURFACE DRIPLINE IRREGULAR SHAPE LAYOUT
NOT TO SCALE

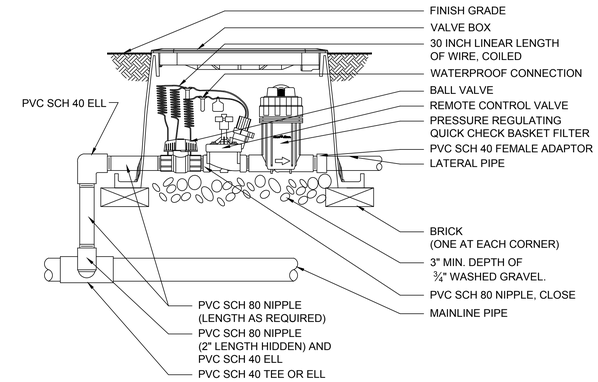

1 REMOTE CONTROL VALVE FOR SUB-SURFACE DRIPLINE
NOT TO SCALE

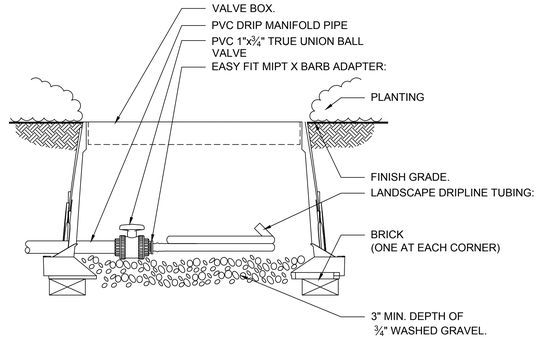

2 SUB-SURFACE DRIPLINE FLUSH POINT
NOT TO SCALE

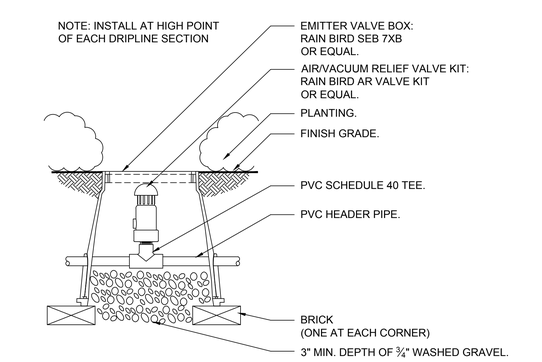

3 AIR/VACUUM RELIEF VALVE IN PVC HEADER
NOT TO SCALE

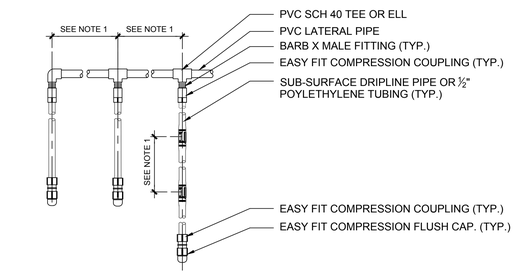

NOTES:
1. LATERAL AND EMITTER SPACING - SEE LEGEND.

4 SUB-SURFACE DRIPLINE LATERALS
NOT TO SCALE

SR
310 Nova Albion Way
San Rafael, CA 94903 415.492.3200

Terra Linda High School Modernization

310 Nova Albion Way
San Rafael, CA 94903
415.492.3200

Date	Issued For
12/11/2019	Schematic Design
01/22/2020	DSA Submittal

VALLIER DESIGN ASSOCIATES INC.
LANDSCAPE ARCHITECTURE PLANNING DESIGN
210 WASHINGTON AVENUE, SUITE G
POINT RICHMOND, CA 94801
TELEPHONE 510.237.7745 FACSIMILE 510.237.5751

HED
417 Montgomery Street
Suite 400
San Francisco, California
94104 USA
(415) 981-2345
WWW.HED.DESIGN

© 2019

Irrigation Details

LI-502

BUILDING KEY							
BUILDING	DESCRIPTION	CONSTRUCTION TYPE	OCCUPANCY	NO. OF STORIES	AREA	APPLICATION #	DATE
BLDG A	CLASSROOMS	II 1 HR	E	2	17,100 SF	23360, 106489	4/1963
BLDG B	STUDENT COMMONS	II-B	A-1, A-2, A-3, E	2	32,971 SF	117738	4/2019
BLDG C	DISTRICT OFFICES	V-N	E	2	22,722 SF	23260, 24060	4/1963, 10/1963
BLDG D	CLASSROOMS	V-N	E	1	8,213 SF	18095, 106489	3/1959, , 9/2009
BLDG E	CLASSROOMS	II 1 HR	E	2	10,986 SF	20750, 105956, 106489, 117586	2/1961, 6/2004, 9/2009, 12/2018
BLDG F	POOL EQUIPMENT	V-N	U	1	600 SF	20509	10/1960
BLDG H	CLASSROOMS	V-N	E	1	9,385 SF	21924, 106489	12/1961, 9/2009
BLDG I	ADMINISTRATION	II 1 HR	B	1	7,480 SF	22569, 106489	5/1962, 9/2009
BLDG J	CAFETERIA	V-N	A	1	8,280 SF	18095, 106489	3/1959, 9/2009
BLDG K	GYMNASIUM	II 1 HR	A	1	21,244 SF	18095, 106489	3/1959, 9/2009
BLDG L	CLASSROOMS	II 1 HR	E	2	31,243 SF	18095, 104196	3/1959, 4/2002
BLDG M	CLASSROOMS	II 1 HR	E	2	33,000 SF	20750, 105956	2/1961, 6/2004
BLDG P	PERFORMANCE HALL	V 1 HR	A	1	10,333 SF	106238	8/2004
BLDG Q/R	CLASSROOMS	V-N	E	1	960 SF	63517, 106228	6/1995, 4/2004
BLDG S	SHOP	V-N	S-1	1	3,193 SF	18095, 106489	3/1959, 9/2009

NOTES:
1. BUILDING WING 'A' IS SEPARATED FROM BUILDING WING 'C' BY AN EXISTING 2-HR AREA SEPARATION WALL FROM BUILDING WING 'M' BY ANOTHER EXISTING 2-HR AREA SEPARATION WALL
2. BUILDING WINGS 'ME' IS SEPARATED FROM BUILDING WING 'L' BY AN EXISTING 2-HR AREA SEPARATION WALL AND FROM BUILDING WING 'A' BY ANOTHER 2H-HR SEPARTION WALL

PLUMBING FIXTURE COUNTS					
	CAMPUS OCCUPANTS (1155 STUDENTS, 85 STAFF = 1240 TOTAL)	MALE FIXTURES REQUIRED	MALE FIXTURES PROVIDED	FEMALE FIXTURES REQUIRED	FEMALE FIXTURES PROVIDED
WATER CLOSETS (MALE 1:50, FEMALE 1:30)	620 MALE, 620 FEMALE	13	35	21	57
URINALS (MALE 1:100)	620 MALE	7	32	X	X
LAVATORIES (MALE 1:40, FEMALE 1:40)	620 MALE, 620 FEMALE	16	40	16	42
		FIXTURES REQUIRED	FIXTURES PROVIDED		
DRINKING FOUNTAINS (1:150)	1240 OCCUPANTS	9	13		

LEGEND

- EXISTING BUILDING INCLUDED IN SCOPE OF WORK
- EXISTING BUILDING NOT INCLUDED IN SCOPE OF WORK
- NEW CONCRETE PAVING, S.C.D.
- PROPERTY LINE
- SAFE DISPERSAL PATH
- ACCESSIBLE PATH OF TRAVEL

DESIGN PROFESSIONAL IN GENERAL RESPONSIBLE CHARGE STATEMENT:
THE POT IDENTIFIED IN THESE CONSTRUCTION DOCUMENTS MEETS THE REQUIREMENTS OF THE CURRENT APPLICABLE CALIFORNIA BUILDING CODE (CBC) ACCESSIBILITY PROVISIONS FOR PATH OF TRAVEL REQUIREMENTS FOR ALTERATIONS, ADDITIONS AND STRUCTURAL REPAIRS. AS PART OF THE DESIGN OF THIS PROJECT, THE POT WAS EXAMINED AND ANY ELEMENTS, COMPONENTS OR PORTIONS OF THE POT THAT WERE DETERMINED TO BE NONCOMPLIANT WITH THE CBC HAVE BEEN IDENTIFIED AND THE CORRECTIVE WORK NECESSARY TO BRING THEM INTO COMPLIANCE HAS BEEN INCLUDED WITHIN THE SCOPE OF THIS PROJECT'S WORK THROUGH DETAILS, DRAWINGS AND SPECIFICATIONS INCORPORATED INTO THESE CONSTRUCTION DOCUMENTS. ANY NONCOMPLIANT ELEMENTS, COMPONENTS OR PORTIONS OF THE POT THAT WILL NOT BE CORRECTED BY THIS PROJECT BASED ON VALUATION THRESHOLD LIMITATIONS OR A FINDING OF UNREASONABLE HARDSHIP ARE INDICATED IN THESE CONSTRUCTION DOCUMENTS. DURING CONSTRUCTION, IF POT ITEMS WITHIN THE SCOPE OF THE PROJECT REPRESENTED AS CBC COMPLIANT ARE FOUND TO BE NONCONFORMING BEYOND REASONABLE CONSTRUCTION TOLERANCES, THE ITEMS SHALL BE BROUGHT INTO COMPLIANCE WITH THE CBC AS A PART OF THIS PROJECT BY MEANS OF A CONSTRUCTION CHANGE DOCUMENT.

DF DRINKING FOUNTAIN
SR STAFF RESTROOM
MR MENS RESTROOM
WR WOMENS RESTROOM

KEYNOTES

1. (E) AC PAVING
2. (E) CONCRETE PAVING
3. (E) 48" MAX HEIGHT LOCK AT VEHICLE GATE
4. (E) COVERED WALKWAY
5. (E) UTILITY ENCLOSURE
6. (E) OVERHEAD SCHOOL ENTRANCE STRUCTURE
7. (E) LANDSCAPE
8. (E) TOW-AWAY SIGN PER DETAIL 7/AS-401
9. CONCRETE PAVING, SEE CIVIL DWGS
10. (E) BIKE RACKS
11. ACCESSIBLE DROP-OFF AREA PER A#01-117586
12. (E) ELEVATOR PER A#01-100263

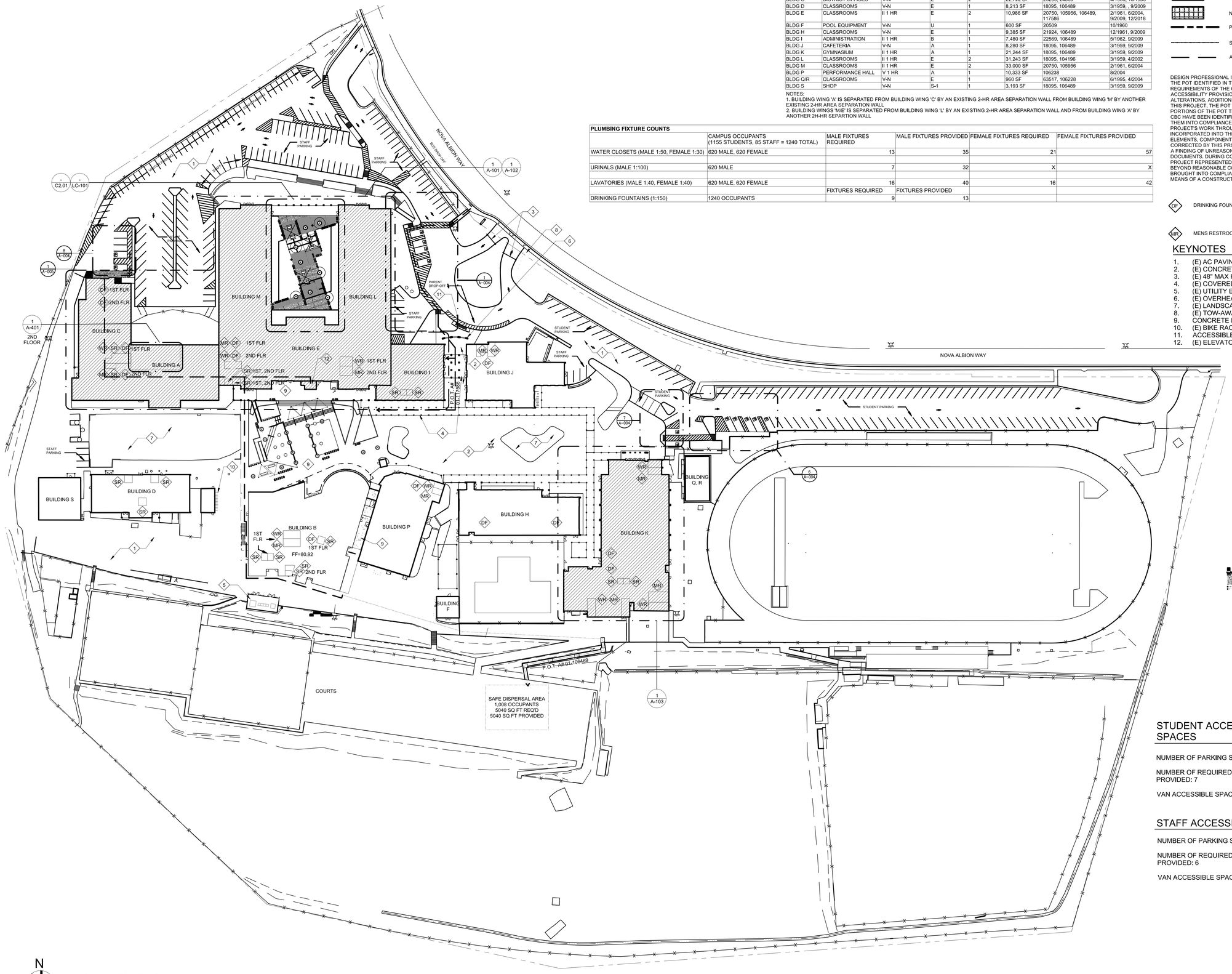

N

SITE PLAN ACCESSIBILITY
1" = 50'-0"

STUDENT ACCESSIBLE PARKING SPACES

NUMBER OF PARKING SPACES: 111

NUMBER OF REQUIRED ACCESSIBLE PARKING SPACES: 5
PROVIDED: 7

VAN ACCESSIBLE SPACES REQUIRED: 2 PROVIDED: 2

STAFF ACCESSIBLE PARKING SPACES

NUMBER OF PARKING SPACES: 137

NUMBER OF REQUIRED ACCESSIBLE PARKING SPACES: 5
PROVIDED: 6

VAN ACCESSIBLE SPACES REQUIRED: 2 PROVIDED: 2

SR
310 Nova Albion Way
San Rafael, CA 94903 415.492.3200

Terra Linda High School
Modernization

310 Nova Albion Way
San Rafael, CA 94903
415.492.3200

Date	Issued For
1/17/2020	DSA Submittal
4/13/2020	BID SET #1

HED
417 Montgomery Street
Suite 400
San Francisco, California
94104 USA

(415) 981-2345

WWW.HED.DESIGN

© 2019

SITE PLAN AND CODE ANALYSIS

A-001

GENERAL NOTES

1. NO NEW SCOPE ON THIS SHEET. EXISTING ACCESSIBLE PARKING PER APP. NO. 01-106489 AND 01-117586

KEYNOTES

A01	12" HIGH LETTERS "NO PARKING" PAINTED WHITE
A02	4" WIDE WHITE STRIPING @ 36" O.C. TYP.
A03	4" WIDE BLUE STRIPING, TYP. AT OUTLINE OF ACCESSIBLE PARKING STALLS
A04	(E) 2% MAX SLOPE IN ALL DIRECTIONS
A05	ACCESSIBILITY SYMBOL PER DETAIL 2/–
A06	(E) TRUNCATED DOMES TO REMAIN, PROTECT
A07	PARKING BUMPER PER DETAIL 3/–
A08	STANDARD ACCESSIBLE PARKING SIGN PER DETAIL 4/–
A09	(E) ASPHALT PAVEMENT
A10	(E) CONC. SIDEWALK, PROTECT
A11	PROVIDE "$250 FINE SIGN" PER DETAIL 4/–
A12	(E) 4" WIDE WHITE STRIPING, PROTECT
A13	(E) 4" WIDE BLUE BORDER, PROTECT
A14	(E) CONC. WHEELSTOP, PROTECT
A15	(E) 12" HIGH LETTERS "NO PARKING" PAINTED WHITE, PROTECT
A16	(E) INTERNATIONAL SYMBOL OF ACCESSIBILITY, PROTECT
A17	(E) STANDARD PARKING SIGN PER DETAIL 4/–
A18	(E) CHAIN LINK FENCE, PROTECT
A19	(E) CONC. CURB RAMP, PROTECT
A20	(E) CONC. CURB, PROTECT
A21	(E) VAN STALL, PROTECT
A22	CONC. CURB RAMP W/ 8.33% MAX. SLOPE.
A23	5" THK. CONC. SIDEWALK W/ 2% MAX. SLOPE IN ALL DIRECTIONS.
A24	6" CONC. CURB. 18/– 19/–
A25	TRUNCATED DOMES PER DETAIL 13/–
A26	12" LETTERS "LOADING ZONE" PAINTED WHITE

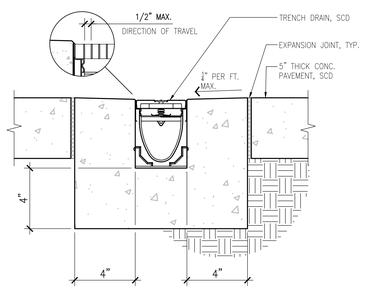

16 TRENCH DETAIL
3" = 1'-0"

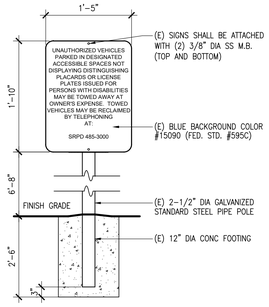

5 (E) TOW-AWAY SIGN
1" = 1'-0"

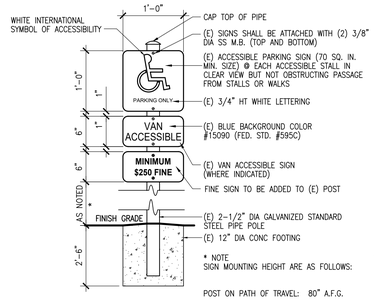

4 (E) ACCESSIBLE PARKING SIGN
1" = 1'-0"

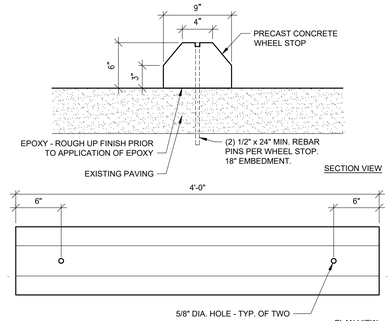

3 (E) PARKING BUMPER
1-1/2" = 1'-0"

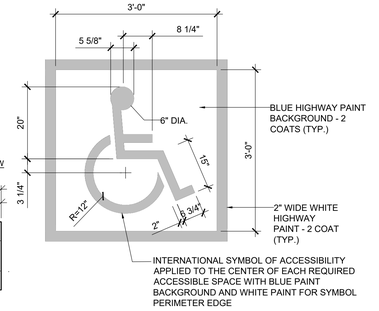

2 (E) ACCESSIBILITY SYMBOL
1" = 1'-0"

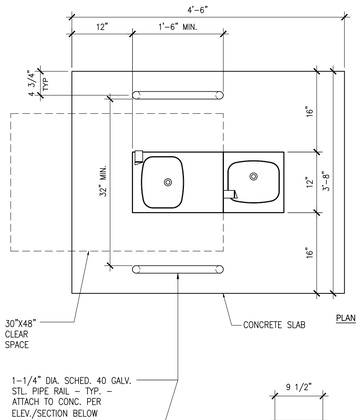

14 (E) HI-LO DRINKING FOUNTAIN
1" = 1'-0"

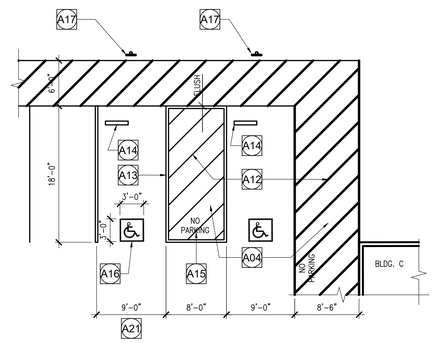

8 (E) ENLARGED PARKING PLAN
1/8" = 1'-0"

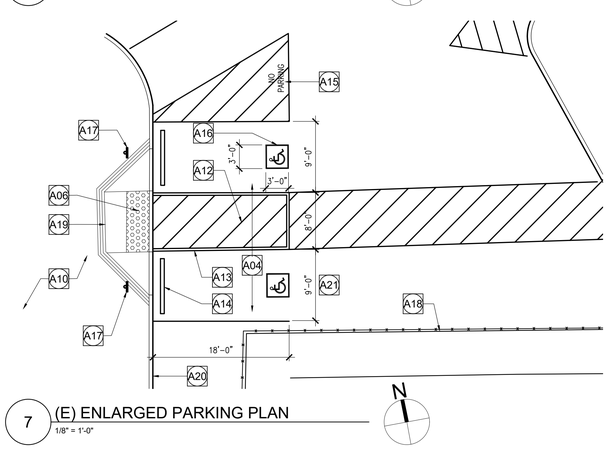

7 (E) ENLARGED PARKING PLAN
1/8" = 1'-0"

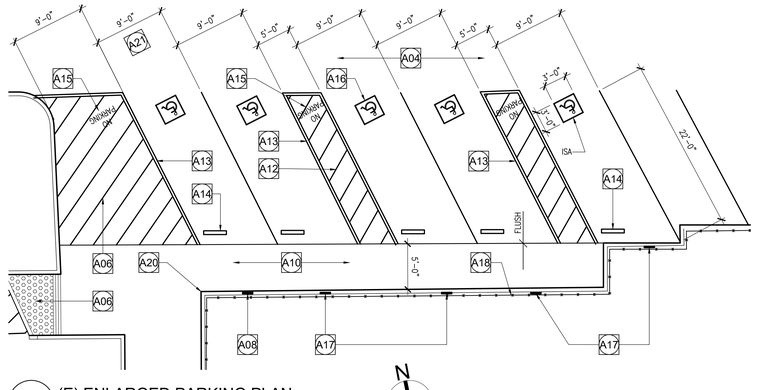

6 (E) ENLARGED PARKING PLAN
1/8" = 1'-0"

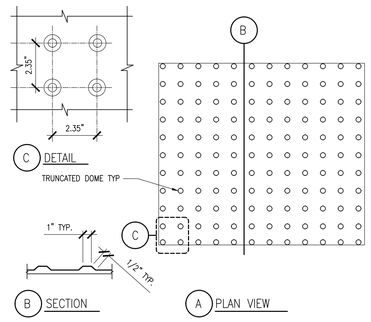

13 (E) TRUNCATED DOMES
1-1/2" = 1'-0"

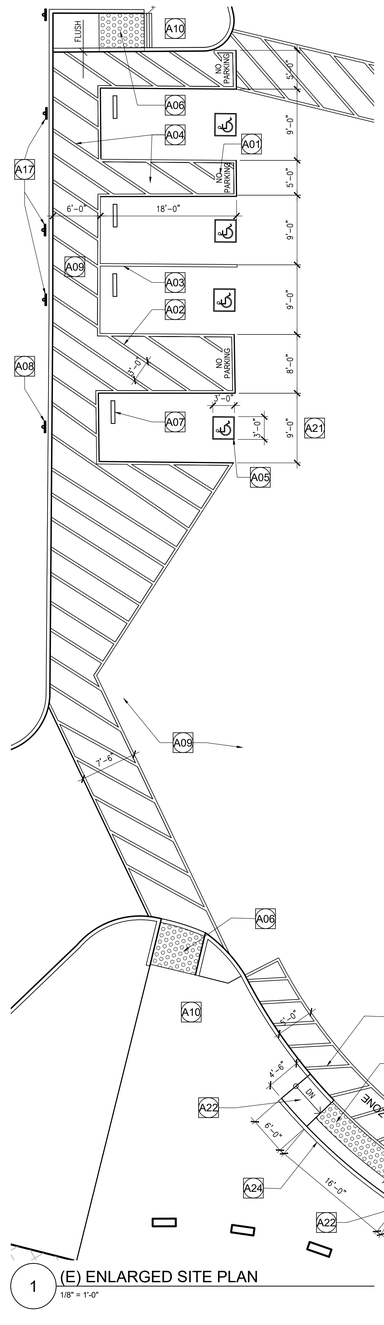

1 (E) ENLARGED SITE PLAN
1/8" = 1'-0"

17 (E) ACCESSIBLE CURB RAMP
1/2" = 1'-0"

SR
310 Nova Albion Way
San Rafael, CA 94903 415.492.3200

Terra Linda High School Modernization

310 Nova Albion Way
San Rafael, CA 94903
415.492.3200

Date	Issued For
1/17/2020	DSA Submittal

HED
417 Montgomery Street
Suite 400
San Francisco, California
94104 USA
(415) 981-2345
WWW.HED.DESIGN

© 2019

Enlarged Site Plan and Site Details

A-004

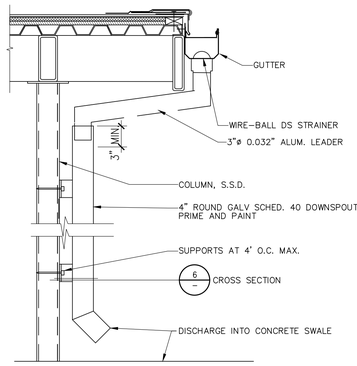

5 LEADER PIPE & DOWNSPOUT

NTS

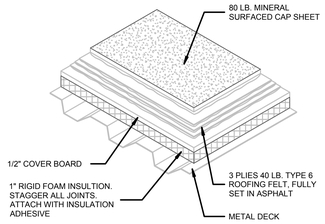

4 ROOFING ASSEMBLY @ CANOPY

3" = 1'-0"

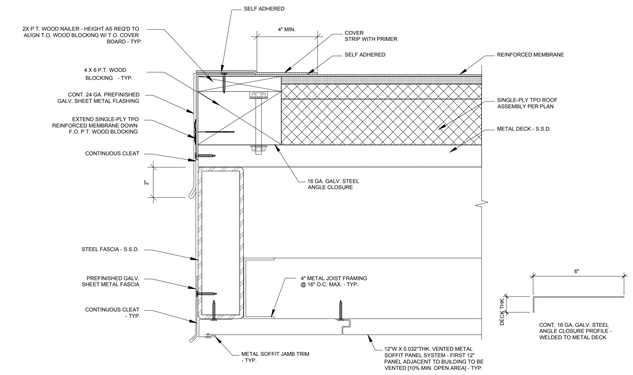

3 TYP. ROOF RAKE @ CANOPY

3" = 1'-0"

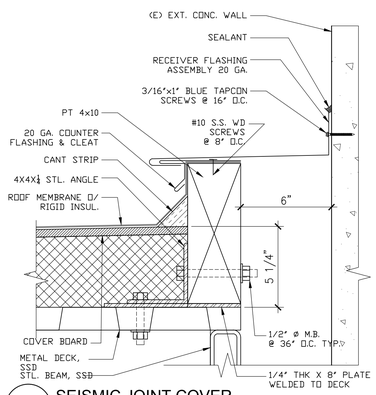

7 SEISMIC JOINT COVER

3" = 1'-0"

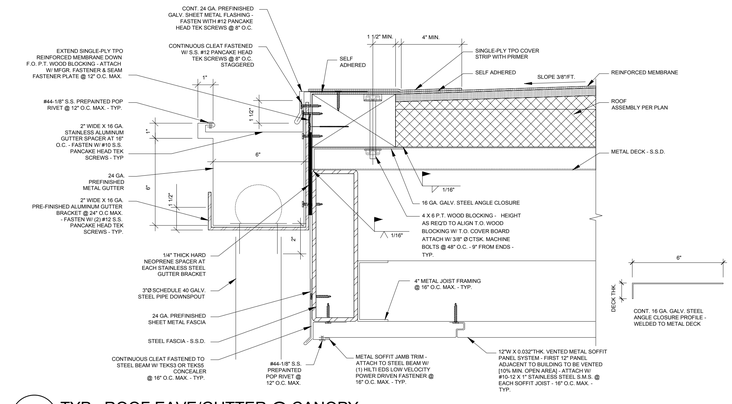

2 TYP. ROOF EAVE/GUTTER @ CANOPY

3" = 1'-0"

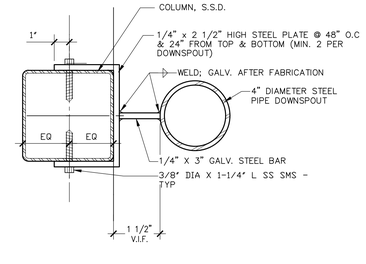

6 DOWNSPOUT ANCHORAGE

SCALE

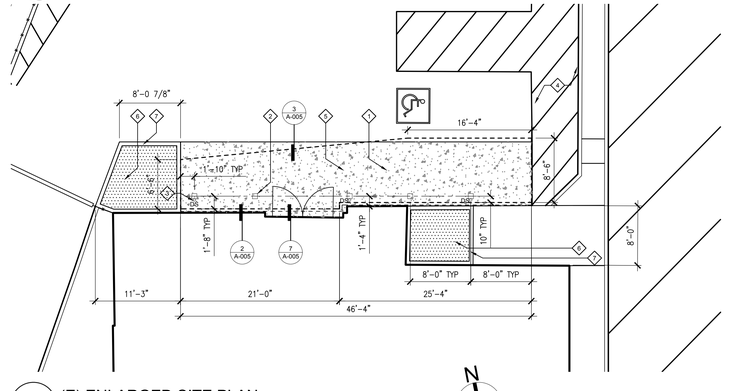

1 (E) ENLARGED SITE PLAN

1/8" = 1'-0"

KEYNOTES

1. ROOFING ASSEMBLY, SEE DETAIL 4/A-005
2. HSS COLUMN, SEE STRUCTURAL DRAWINGS
3. DOWNSPOUT, SEE DETAIL 6/A-005
4. RE-STRIPE EXISTING PARKING STRIPING
5. NEW CONCRETE PAVING
6. NEW LANDSCAPE
7. NEW CONCRETE CURB

SR

310 Nova Albion Way
San Rafael, CA 94903 415.492.3200

Terra Linda High School Modernization

310 Nova Albion Way
San Rafael, CA 94903
415.492.3200

Date	Issued For
1/17/2020	DSA Submittal
4/13/2020	BID SET #1

HED

417 Montgomery Street
Suite 400
San Francisco, California
94104 USA

(415) 981-2345

WWW.HED.DESIGN

© 2019

Enlarged Site Plan and Site Details

A-005

LEGEND

E05B — DOOR TAG

RESTROOM E01-R1 — ROOM NUMBER (TAG)

G101 / CW6 — NEW OPENING (TAG). DEMOLISH EXISTING WINDOW. SEE OPENING SCHEDULES ON A-601.

PROPERTY LINE

KEYNOTES

1. DEMOLISH PORTION OF WALL PRIOR TO INSTALLATION OF NEW CURTAIN WALL

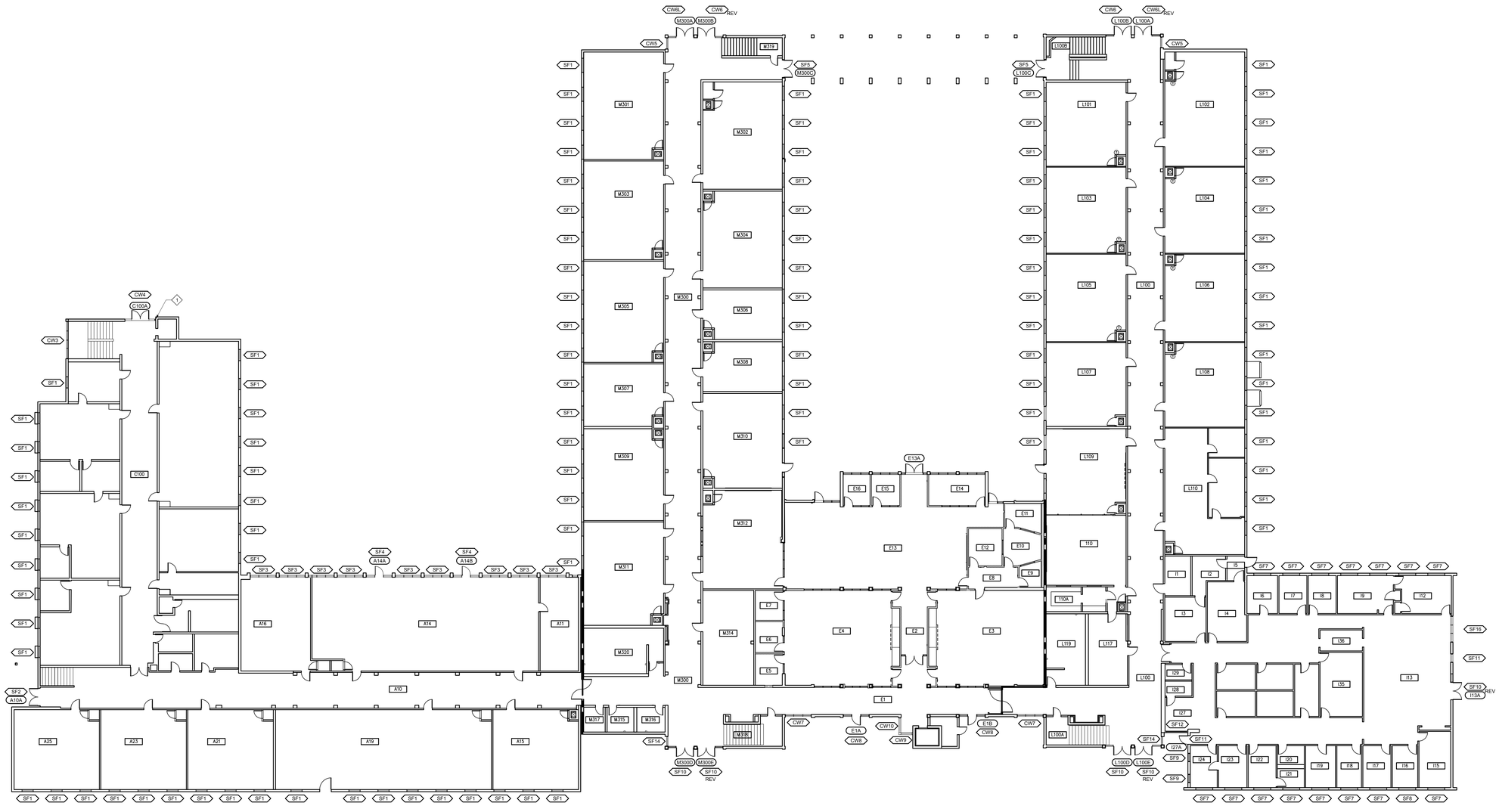

N

FIRST FLOOR PLAN

1/16" = 1'-0"

SR

310 Nova Albion Way
San Rafael, CA 94903 415.492.3200

Terra Linda High School
Modernization

310 Nova Albion Way
San Rafael, CA 94903
415.492.3200

Date	Issued For
1/17/2020	DSA Submittal
4/13/2020	BID SET #1

HED

417 Montgomery Street
Suite 400
San Francisco, California
94104 USA

(415) 981-2345

WWW.HED.DESIGN

© 2019

FIRST FLOOR PLAN - MAIN BUILDING

A-101

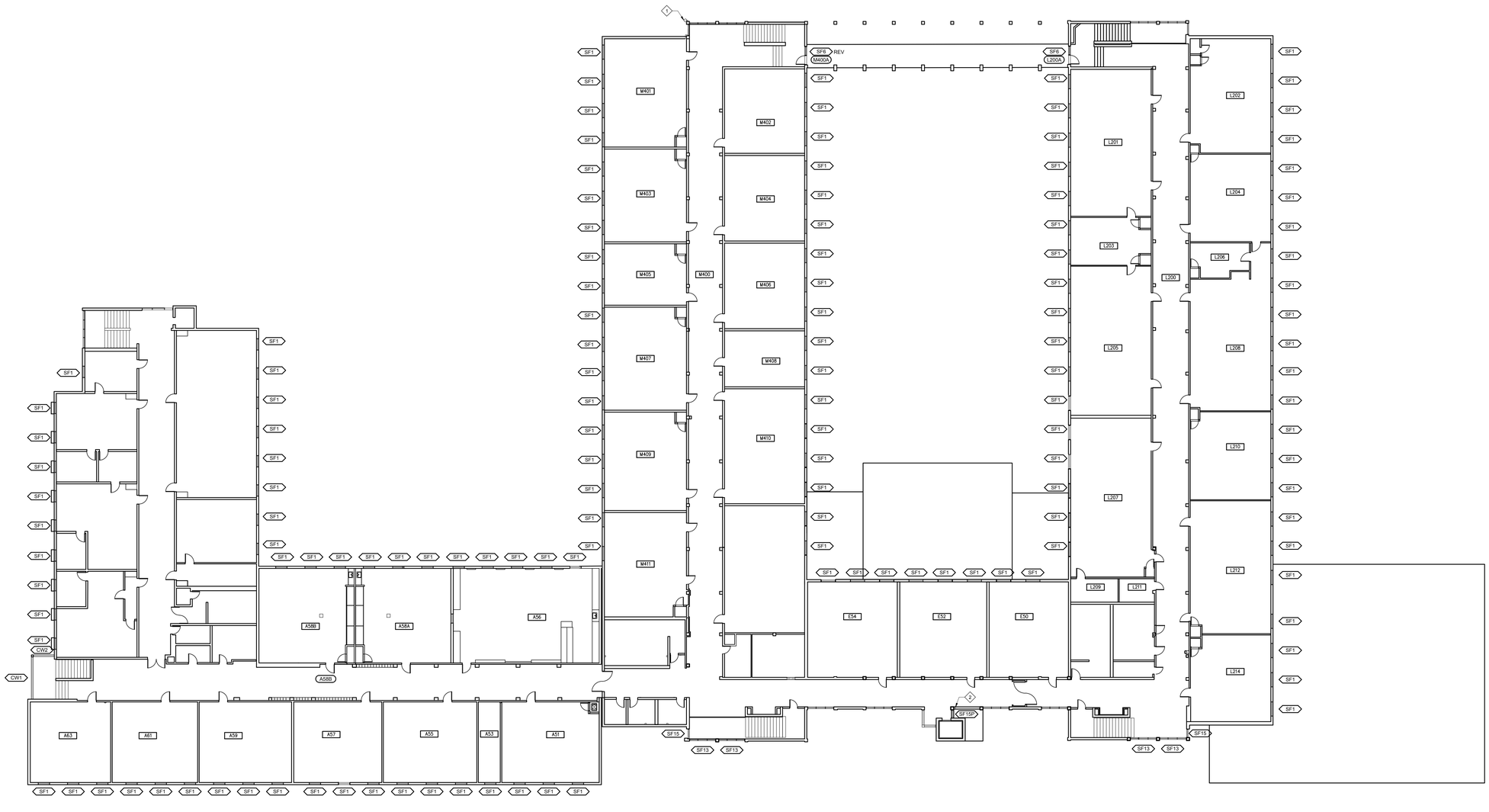

N

SECOND FLOOR PLAN
1/16" = 1'-0"

LEGEND

DOOR TAG (E05B)

ROOM NUMBER (TAG) (RESTROOM E01-R1)

G101 / CW6 — NEW OPENING (TAG). DEMOLISH EXISTING WINDOW. SEE OPENING SCHEDULES ON A-601.

PROPERTY LINE

KEYNOTES

1. REMOVE AND REROUTE CONDUIT FOR SECURITY CAMERA TO ROOFTOP. PATCH AND REPAIR CONDUIT PENETRATION AT WALL.
2. REMOVE AND REROUTE GAS LINE THROUGH STUD WALL

SR
310 Nova Albion Way
San Rafael, CA 94903 415.492.3200

Terra Linda High School Modernization

310 Nova Albion Way
San Rafael, CA 94903
415.492.3200

Date	Issued For
1/17/2020	DSA Submittal
4/13/2020	BID SET #1

HED
417 Montgomery Street
Suite 400
San Francisco, California
94104 USA
(415) 981-2345
WWW.HED.DESIGN

© 2019

SECOND FLOOR PLAN - MAIN BUILDING

A-102

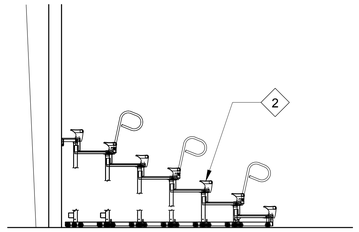

SECTION
1/4" = 1'-0"

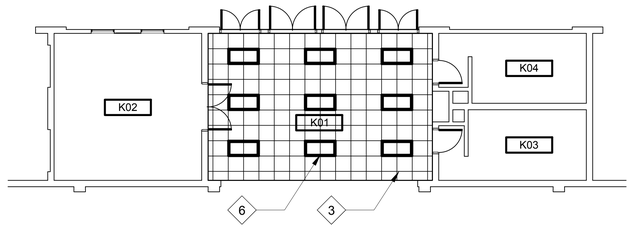

FIRST FLOOR REFLECTED CEILING PLAN
1/8" = 1'-0"

NOTES (TYPICAL, U.O.N.)

1. EXISTING BLEACHERS TO BE DEMLOLISHED
2. NEW BLEACHERS, DEFERRED SUBMITTAL
3. NEW CEILING TILE IN EXISTING CEILING GRID
4. EXISTING FLOORING TO BE REFINISHED PER FINISH SCHEDULE
5. NEW STRIPING PER DETAIL 9/A-591
6. EXISTING LIGHTING AND DEVICES TO REMAIN PROTECT IN PLACE. REINSTALL DEVICES AS REQUIRED.
7. NEW BACKBOARD PADDING
8. WALLS AND CEILING TO BE PAINTED (INCLUDING EXISTING SOUND PANELING) (ADD-ALTERNATE)

LEGEND

E05B — DOOR TAG

RESTROOM E01-R1 — ROOM NAME & NUMBER (TAG)

PROPERTY LINE

GENERAL NOTES

1. SEE G-012 FOR SEAT COUNT

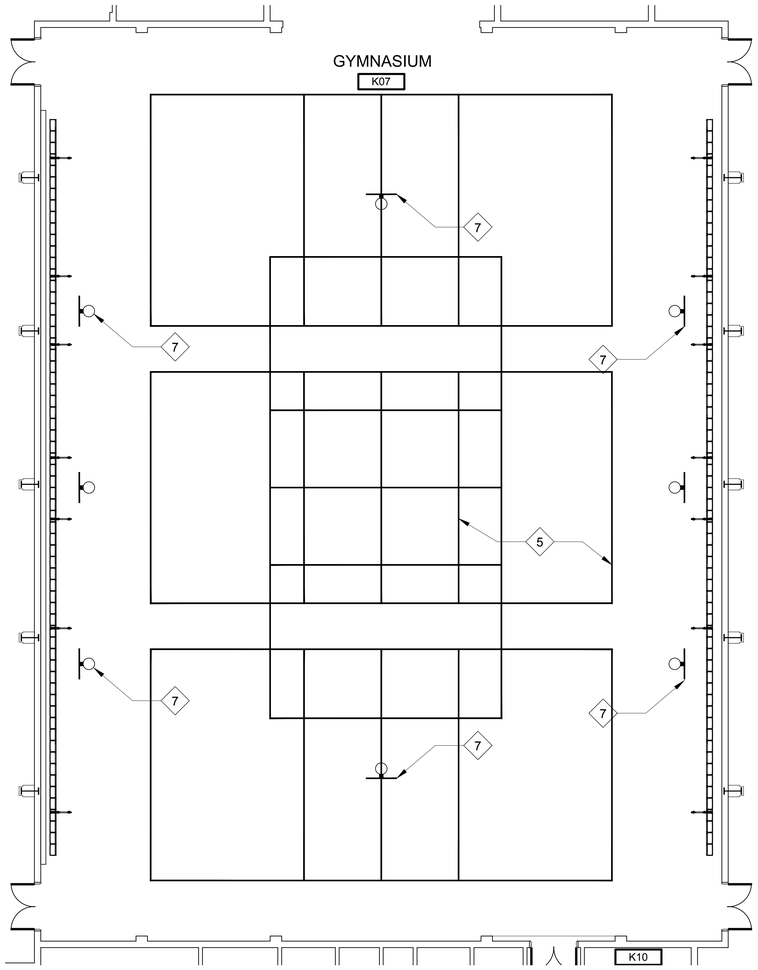

STRIPING AND BACKBOARD PLAN
1/8" = 1'-0"

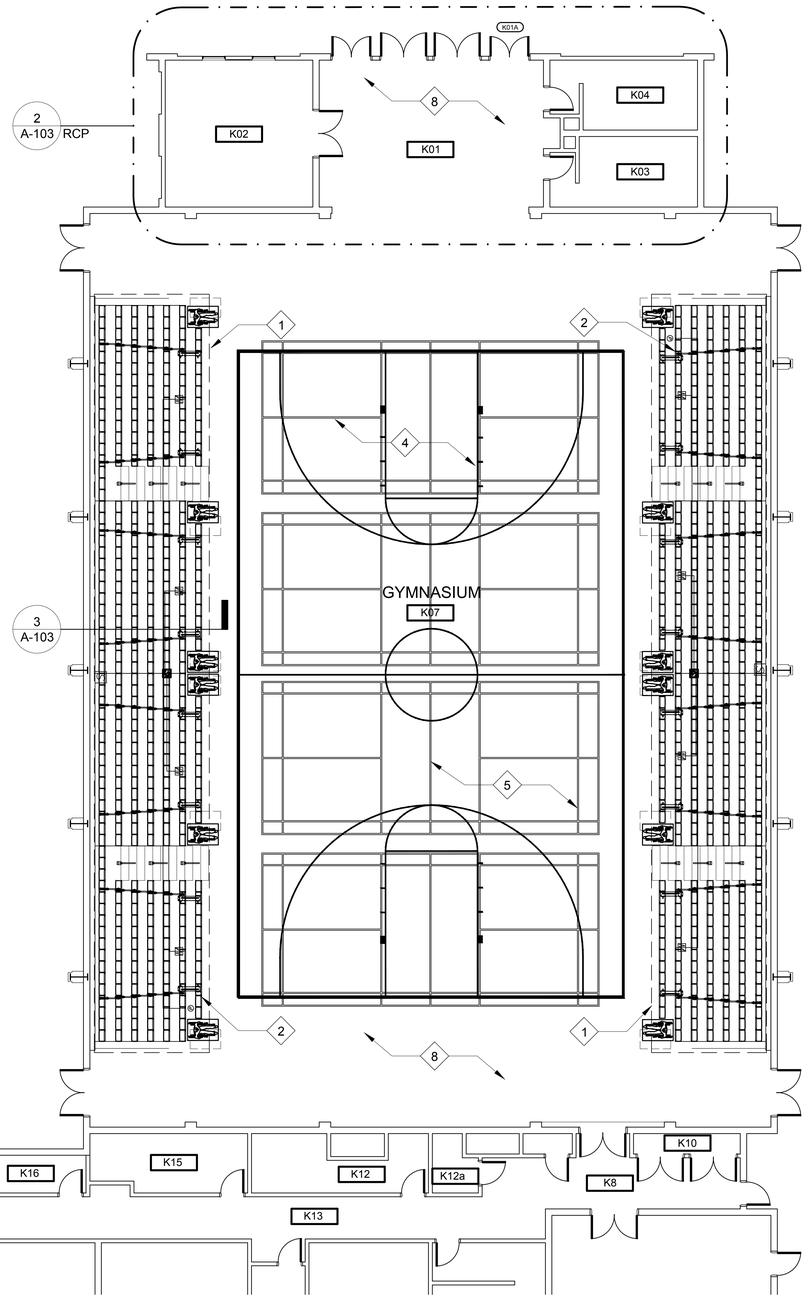

N

FIRST FLOOR PLAN
1/8" = 1'-0"

SR
310 Nova Albion Way
San Rafael, CA 94903 415.492.3200

Terra Linda High School Modernization

310 Nova Albion Way
San Rafael, CA 94903
415.492.3200

Date	Issued For
1/17/2020	DSA Submittal
4/13/2020	BID SET #1

HED
417 Montgomery Street
Suite 400
San Francisco, California
94104 USA
(415) 981-2345
WWW.HED.DESIGN

© 2019

FIRST FLOOR PLAN & RCP - GYM

A-103

NOTES (TYPICAL, U.O.N.)

1. (E) CASEWORK TO BE DEMOLISHED, TYP.
2. (E) WALL TO BE DEMOLISHED
3. (E) CEILING TO BE DEMOLISHED. PROTECT DEVICES SPRINKLERS, AND GRILLES PER ELECTRICAL AND MECHANICAL DRAWINGS
4. (E) SOFFIT TO REMAIN. PROTECT IN PLACE
5. (E) LOCKERS TO BE REMOVED
6. (E) LOCKERS TO REMAIN, PROTECT IN PLACE
7. (E) FLOOR FINISH TO BE REMOVED

LEGEND

RESTROOM E01-R1 ROOM NAME & NUMBER (TAG)

PROPERTY LINE

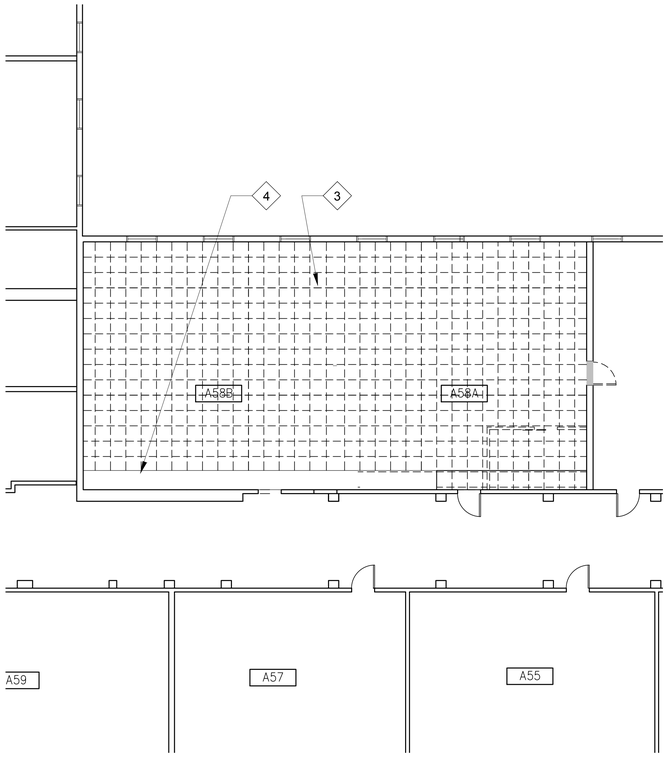

2 SECOND FLOOR REFLECT CEILING PLAN - CLASSROOMS
1/8" = 1'-0"

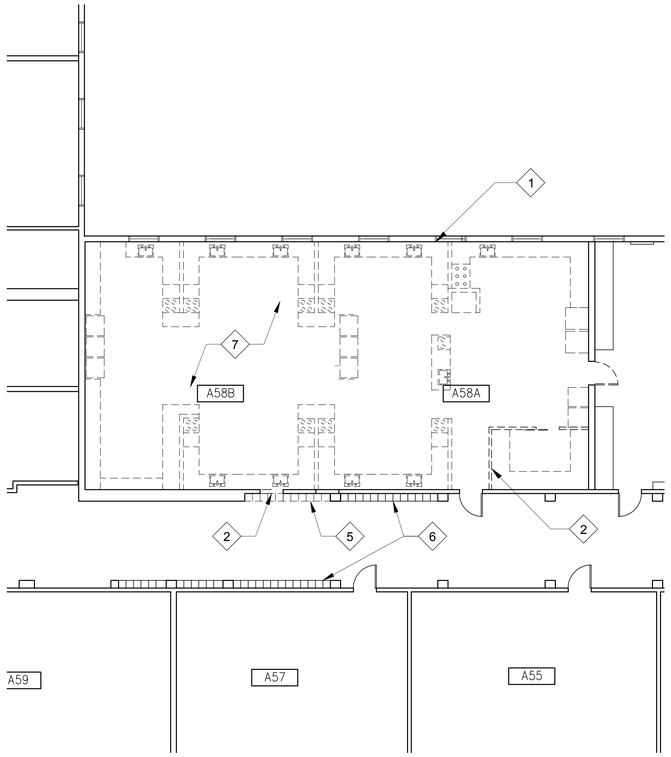

1 SECOND FLOOR PLAN - CLASSROOMS
1/8" = 1'-0"

310 Nova Albion Way
San Rafael, CA 94903 415.492.3200

Terra Linda High School Modernization

310 Nova Albion Way
San Rafael, CA 94903
415.492.3200

Date	Issued For
1/17/2020	DSA Submittal
4/13/2020	BID SET #1

HED
417 Montgomery Street
Suite 400
San Francisco, California
94104 USA

(415) 981-2345

WWW.HED.DESIGN

© 2019

ENLARGED DEMOLITION FLOOR PLAN & RCP

A-401

NOTES (TYPICAL, U.O.N.)

1. NEW CASEWORK, SEE INTERIOR ELEVATIONS
2. NEW DROPPED CEILING TILE, SEE A-571-573
3. NEW PARTITION WALL, SEE 3/A-591
4. NEW LIGHTING, SEE ELECTRICAL DRAWINGS
5. INFILL WALL, SEE INTERIOR ELEVATIONS
6. NEW SOFFIT, SEE A-522
7. NEW OFCI PROJECTOR, SEE 5/A-591

LEGEND

RESTROOM E01-R1 — ROOM NAME & NUMBER (TAG)

PROPERTY LINE

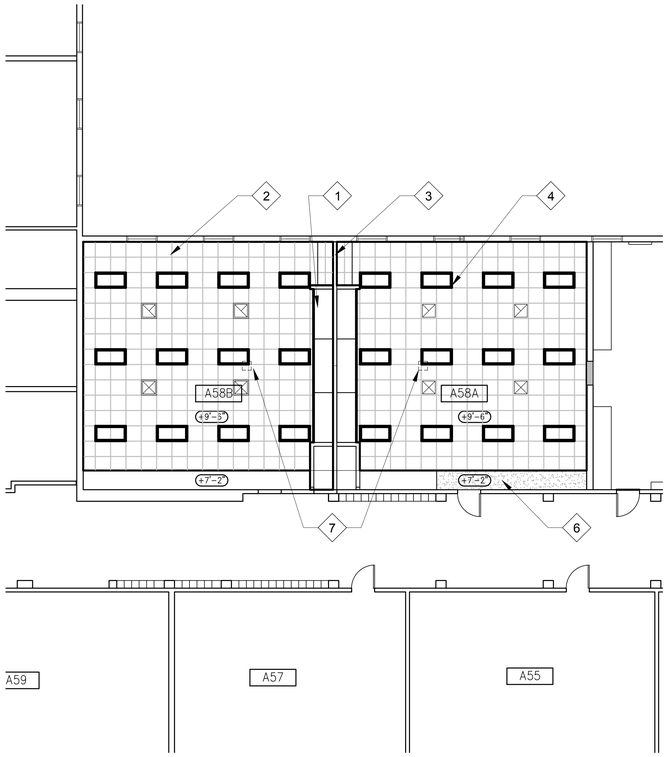

2 SECOND FLOOR REFLECT CEILING PLAN - CLASSROOMS
1/8" = 1'-0"

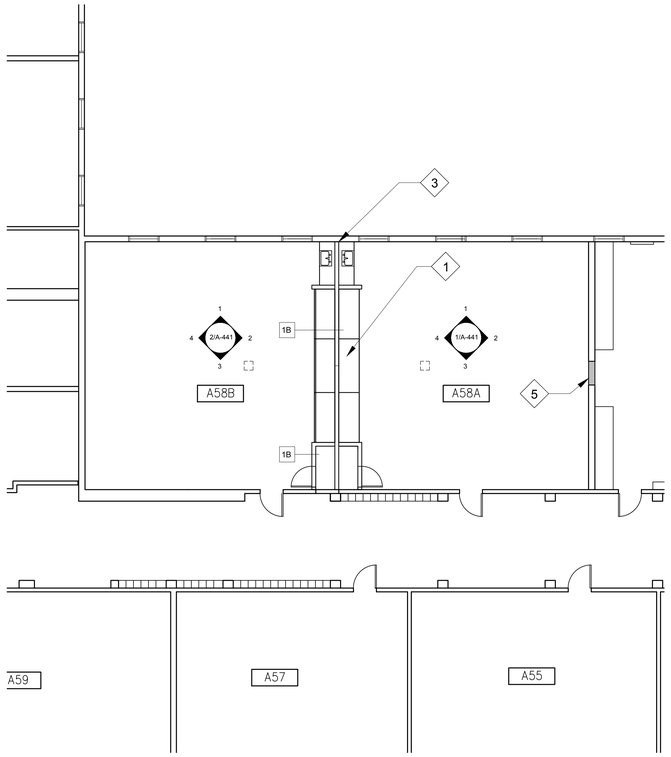

1 SECOND FLOOR PLAN - CLASSROOMS
1/8" = 1'-0"

310 Nova Albion Way
San Rafael, CA 94903 415.492.3200

Terra Linda High School Modernization

310 Nova Albion Way
San Rafael, CA 94903
415.492.3200

Date	Issued For
1/17/2020	DSA Submittal

HED
417 Montgomery Street
Suite 400
San Francisco, California
94104 USA

(415) 981-2345

WWW.HED.DESIGN

© 2019

ENLARGED FLOOR PLAN & RCP

A-402

GENERAL NOTES

1. REFER TO FINISH SCHEDULE FOR ADDITIONAL INFORMATION.

2. REFER TO ELECTRICAL AND MECHANICAL DRAWINGS FOR ADDITIONAL INFORMATION.

3. FOR TYPICAL CASEWORK TYPE AND DETAILS, SEE SHEET A-581.

4. FOR TYPICAL BACKING SCHEDULE, SEE DETAIL 19/A-521.

5. PATCH AND REPAIR WALL WHERE DEVICES, OUTLETS, EQUIPMENT, OR CASEWORK HAVE BEEN REMOVED OR RELOCATED

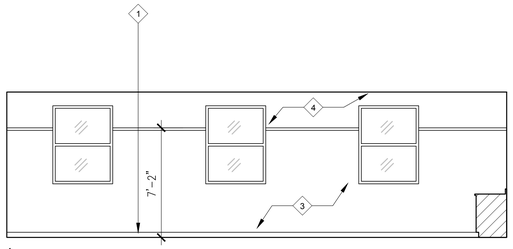

1

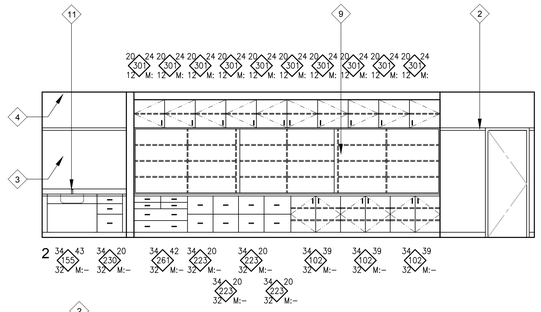

2

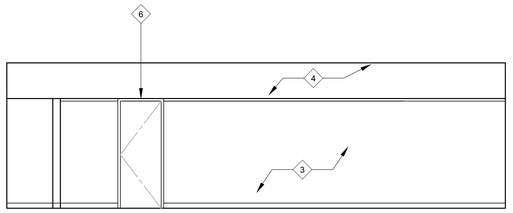

3

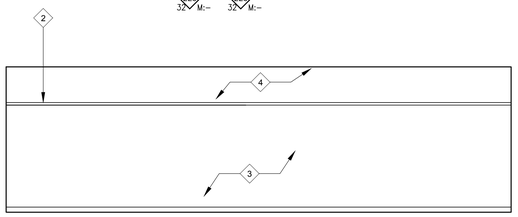

4

A58B CLASSROOM
3/16" = 1'-0"

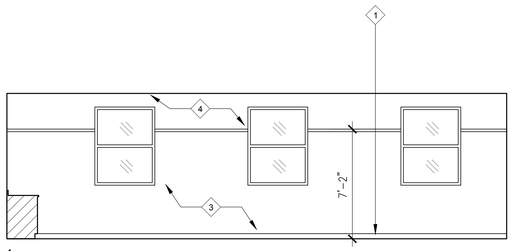

1

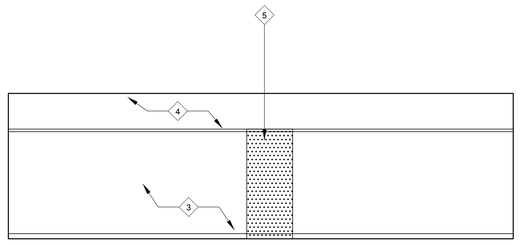

2

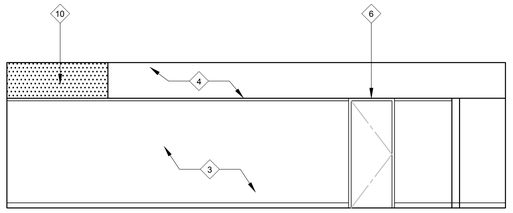

3

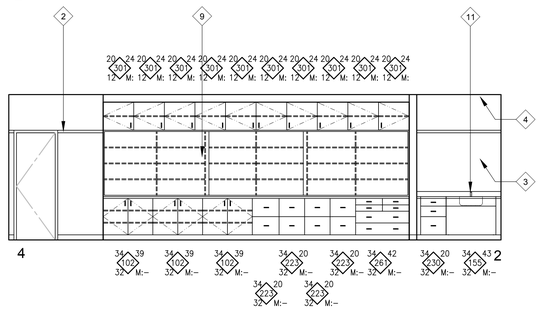

4

A58A - CLASSROOM
3/16" = 1'-0"

NOTES (TYPICAL, U.O.N.)

1. WALL BASE, TYP.
2. WOOD CAP, SEE 8/A-591
3. WALL COVERING OVER TACK PANELING
4. WALL COVERING
5. INFILL WALL WITH STUD FRAMING, SEE A-521
6. NEW DOOR OPENING, SEE PLANS
7. NEW WINDOW OPENING, SEE PLANS
8. NOT USED
9. SLIDING MARKER BOARD, SEE 5/A-591
10. NEW SOFFIT, SEE REFLECTED CEILING PLANS
11. SINK, SEE PLUMBING DRAWINGS

SR

310 Nova Albion Way
San Rafael, CA 94903 415.492.3200

Terra Linda High School
Modernization

310 Nova Albion Way
San Rafael, CA 94903
415.492.3200

Date	Issued For
1/17/2020	DSA Submittal
4/13/2020	BID SET #1

HED

417 Montgomery Street
Suite 400
San Francisco, California
94104 USA

(415) 981-2345

WWW.HED.DESIGN

© 2019

INTERIOR
ELEVATIONS

A-441

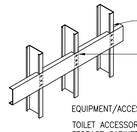

EQUIPMENT/ACCESSORIES TO BE ANCHORED:

TOILET ACCESSORIES, CHALK AND TACK BOARDS, BASE CABINETS, TALL STORAGE CABINETS, SLIDING MARKER BOARD ASSEMBLY, ETC.

MOUNT ITEM TO CHANNEL WITH #12 S.M.S. U.O.N.

TYPE A – METAL STUD WALL

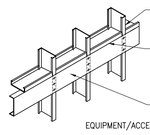

EQUIPMENT/ACCESSORIES TO BE ANCHORED:

WALL HUNG CABINETS, WALL HUNG EQUIPMENT, GRAB BARS, FUME HOODS, ETC.

MOUNT ITEM TO CHANNEL WITH #12 S.M.S. U.O.N.

TYPE B – METAL STUD WALL

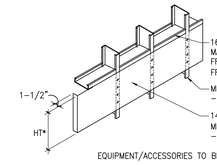

EQUIPMENT/ACCESSORIES TO BE ANCHORED:

WALL HUNG LAVATORIES & PLUMBING FIXTURES, TV MOUNTS, DRINKING FOUNTAINS, ETC.

*HEIGHT AS REQ'D FOR PROPER MOUNTING OF EQUIPMENT – 18" MIN.

MOUNT ITEM TO CHANNEL WITH #12 S.M.S. U.O.N.

TYPE C – METAL STUD WALL

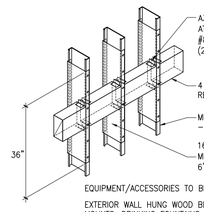

EQUIPMENT/ACCESSORIES TO BE ANCHORED:

EXTERIOR WALL HUNG WOOD BENCHES, TV MOUNTS, DRINKING FOUNTAINS, ETC.

MOUNT ITEM TO BLOCKING WITH 3/8" LAG SCREWS U.O.N.

TYPE D – METAL STUD WALL

TYPICAL NOTES:

1. WALL STUD FLANGES ARE CONTINUOUS
2. SEE TYPICAL WALL FRAMING SCHEDULE FOR GAUGE OF STUDS
3. VERIFY LENGTH, HEIGHT, LOCATION AND NUMBER REQUIRED WITH EQUIPMENT AND ACCESSORY MANUFACTURER.
4. CONTRACTOR IS RESPONSIBLE TO INSURE WALL FINISH IS SMOOTH & PLUMB FOR THE ITEM THAT BACKING PLATE IS INTENDED FOR

TYP. METAL FRAMING BACKING 1/2"=1'–0" | 19

CONDITION	ANCHORAGE
CONC:	(2) 3/8"ø EXPANSION ANCHORS @ 24" O.C. PER SHEET S1.1
METAL:	(2) #10 SMS @ 16" O.C. MAX.
STRUCTURAL STEEL:	(2) HILTI EDS LOW VELOCITY POWER DRIVEN FASTENERS @ 24" O.C. – ICC ESR 1663

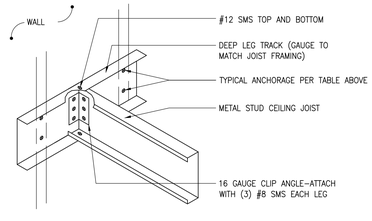

TYP. MTL. FRAMING LEDGER ATTACH. 1–1/2"=1'–0" | 18

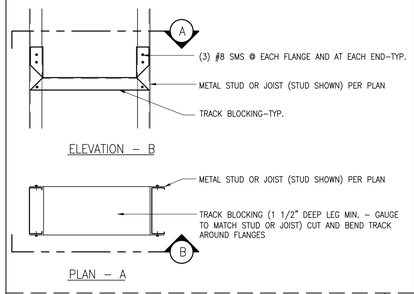

TYP. TRACK BLOCKING 1–1/2"=1'–0" | 17

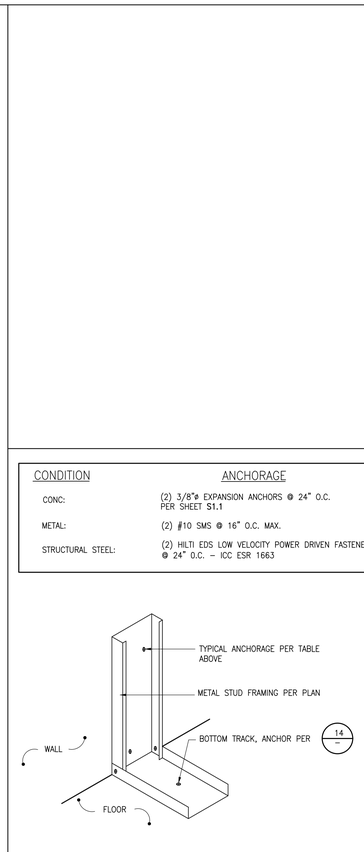

TYP. WALL TO WALL ANCHORAGE 1–1/2"=1'–0" | 15

CONDITION	ANCHORAGE
CONC SLAB:	METAL TRACK – ATTACH W/ 0.145 SHANK DIAMETER HILTI X-DNI @ 32" O.C. WITH STEEL WASHER – 6" MAX. FROM ENDS – MIN. EMBEDMENT 1–1/2" – ICC ESR #2379
CONC CURB:	SEE STRUCTURAL DRAWINGS

NOTE:
PROVIDE ADDITIONAL ANCHORAGE @ EACH SIDE OF JAMB STUD AND EACH BACKING PLATE STUD.

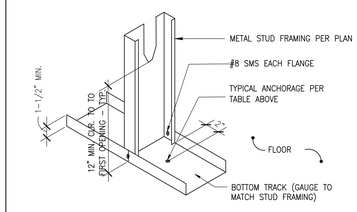

TYP. BOTTOM TRACK ANCHORAGE 1–1/2"=1'–0" | 14

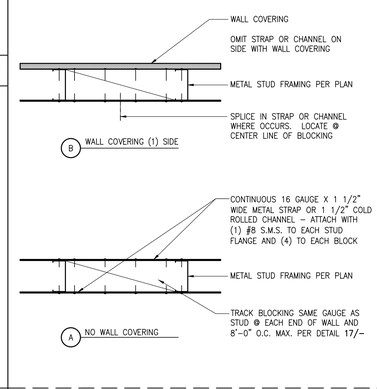

TYP. BRIDGING 1–1/2"=1'–0" | 13

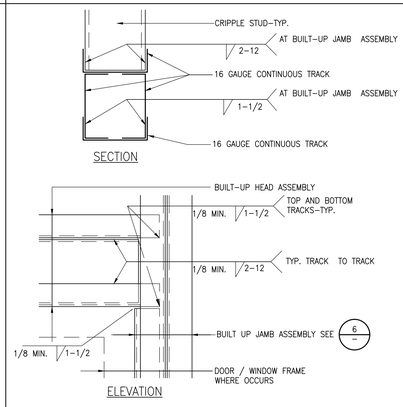

OPENING HEADER – 16'–0" MAX WIDTH 3"=1'–0" | 11

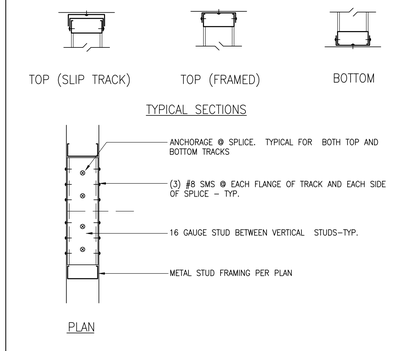

TYP. METAL FRAMING TRACK SPLICE 1–1/2"=1'–0" | 10

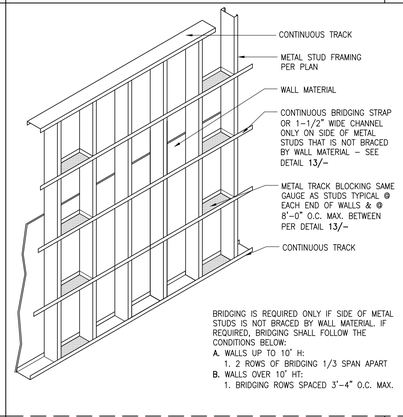

TYP. METAL FRAMING BRIDGING 1/2"=1'–0" | 9

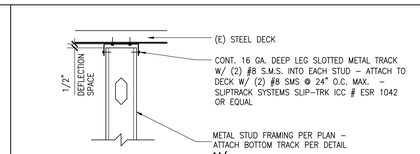

PERPENDICULAR TO DECKING

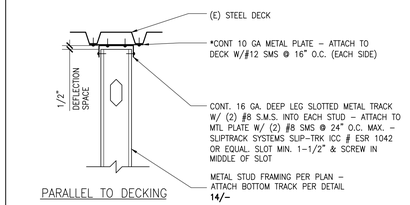

PARALLEL TO DECKING

TYP. TRACK ATTACHMENT – DECK 1–1/2"=1'–0" | 8

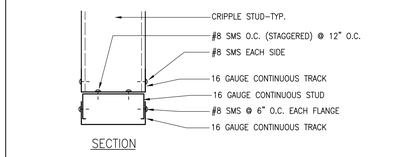

OPENING HEADER – 8'–6" MAX WIDTH 3"=1'–0" | 7

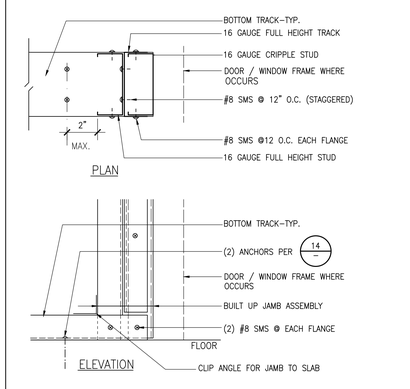

TRACK ANCHORAGE – 16'–0" OPENING 3"=1'–0" | 6

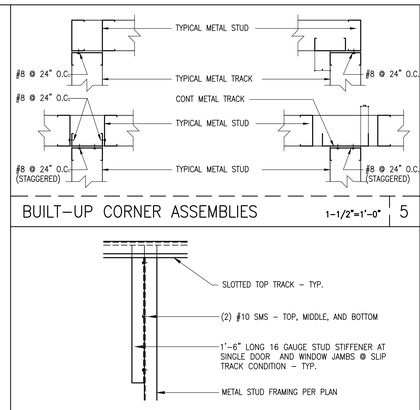

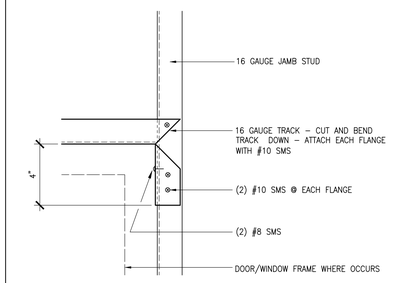

OPENING HEADER – 4'–6" MAX WIDTH 3"=1'–0" | 3

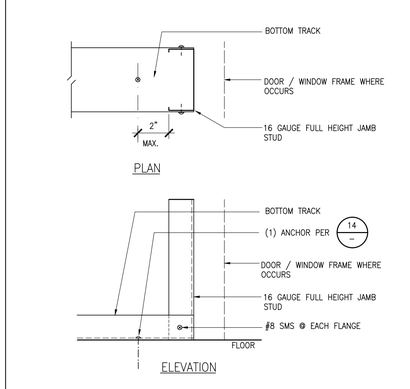

TRACK ANCHORAGE – 4'–6" OPENING 3"=1'–0" | 2

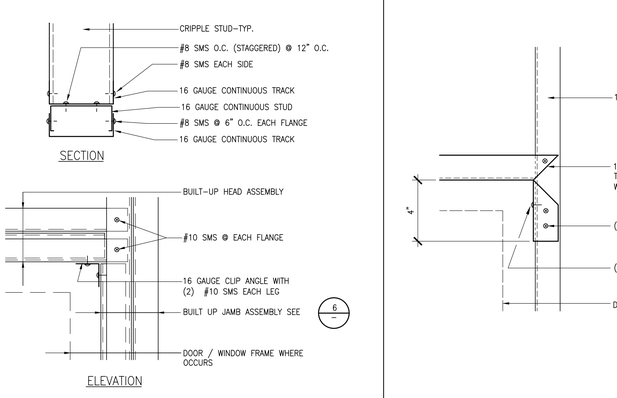

BRIDGING IS REQUIRED ONLY IF SIDE OF METAL STUDS IS NOT BRACED BY WALL MATERIAL. IF REQUIRED, SEE DETAIL 9/–

TYPICAL INTERIOR STUD WALL FRAMING (NON LOAD–BEARING WALLS ONLY) 1/4"=1'–0" | 1

METAL FRAMING NOTES

GALVANIZED METAL STUDS ARE / HAVE BEEN CHOSEN BASED ON I.C.C. REPORT NO. ESR–3064P. METAL STUDS SHALL BE MADE OF MINIMUM CHIPS APPROVED STANDARD FOR RECYCLED CONTENT AND CONFORM TO ASTM A–653 (GALVANIZING).

METAL FRAMING SHALL BE THE FOLLOWING:

1. FOR INTERIOR WALLS/PARTITIONS WITH GYPSUM BOARD ON EITHER ONE OR BOTH SIDES, USE THE FOLLOWING, U.O.N.:
   A. HEIGHTS UP TO 16'–0" 16 GA X 4" MIN DEEP STUDS @ 16" O.C.
   B. HEIGHTS UP TO 26'–0" 16 GA X 6" MIN DEEP STUDS @ 16" O.C.
   C. STUD AND JOIST FLANGE SHALL BE 1–5/8" DEEP
   D. TRACK FLANGE SHALL BE 1 1/4" MIN. DEEP
2. FOR EXTERIOR WALLS SEE STRUCTURAL DRAWINGS.
3. TOP AND BOTTOM TRACKS FOR ALL STUD WALLS/PARTITIONS SHALL BE THE SAME SIZE AND GAUGE AS STUDS, EXCEPT USE 16 GAUGE TRACKS AS INDICATED FOR BACKING, SLIP TRACKS, ETC.
4. WHERE CABINETS ARE TO BE ANCHORED TO STUD WALLS/PARTITIONS, FOLLOW TYPICAL DETAILS FOR STUDS AND BACKING.
5. ALL STUDS, JOISTS, AND TOP TRACK SHALL CONFORM WITH ASTM A–653, GRADE "A" FOR 20 GAUGE AND LIGHTER AND GRADE "C" FOR 18 GAUGE AND HEAVIER

TYPICAL CONNECTIONS U.O.N.:

1. TRACK TO STUD: #8 SMS EACH FLANGE
2. DOUBLE STUDS: #8 SMS @ 12" O.C. (WEB TO WEB) (STAGGERED)
3. BUILT UP CORNERS: #8 SMS @ 24" O.C.
4A. FACE OF MEMBER TO FLANGE OF MEMBER ≤ = 4": (2) #10 SMS
4B. FACE OF MEMBER TO FLANGE OF MEMBER > = 4": (3) #10 SMS
5. LAPPED CONNECTION: (3) #8 SMS (WEB TO WEB)
6. TOP PLATE TO JOIST: (2) #8 SMS
7. TOP PLATE TO BLOCKING: #8 SMS @ 4" O.C.
8. TOP PLATE TO RIDGE TRACK: #8 SMS @ 4"O.C.

MINIMUM ATTACHMENT OF APPROVED WALL COVERINGS TO PROVIDE CONTINUOUS ADEQUATE LATERAL SUPPORT FOR STUD FLANGES:

WALL COVERING WITH DIRECT ATTACHMENT:

APPROVED LATHS FOR PLASTER: PER CBC TABLE 2507.2. LATH, PLASTERING & ACCESSORIES

SINGLE AND DOUBLE–PLY GYPSUM WALLBOARD: PER CBC TABLE 2508.1 INSTALLATION OF GYPSUM CONSTRUCTION

PLYWOOD (NON–STRUCTURAL): #6 PHILLIPS BUGLE HEAD SMS (1/4" MIN PENETRATION) SPACED PER CBC SECTION 2304.9

SR
310 Nova Albion Way
San Rafael, CA 94903 415.492.3200

Terra Linda High School Modernization

310 Nova Albion Way
San Rafael, CA 94903
415.492.3200

Date	Issued For
1/17/2020	DSA Submittal

HED
417 Montgomery Street
Suite 400
San Francisco, California
94104 USA
(415) 981-2345
WWW.HED.DESIGN

© 2019

Metal Framing Details

A-521

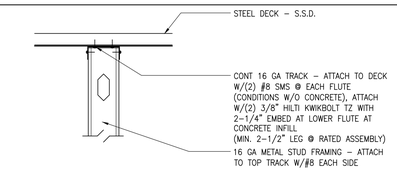

PERPENDICULAR TO DECKING

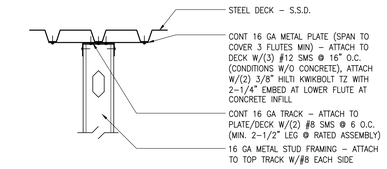

PARALLEL TO DECKING

TRACK ATTACHMENT – DECK 1-1/2"=1'-0" 8

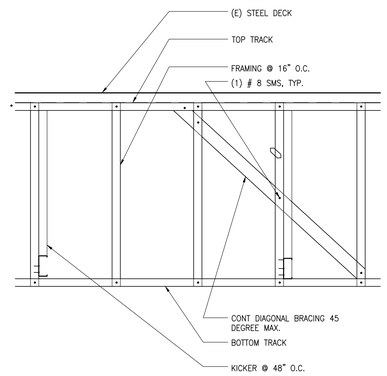

SOFFIT FRAMING ELEVATION 1"=1'-0" 7

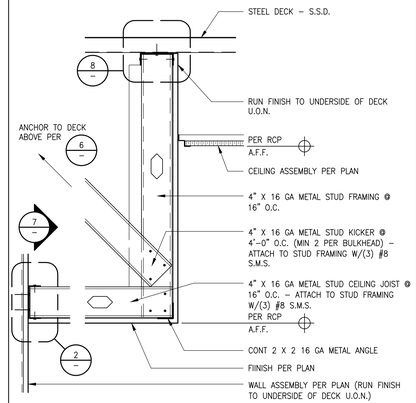

SOFFIT 1-1/2"=1'-0" 3

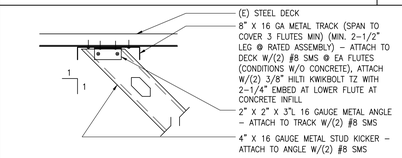

PARALLEL TO DECKING

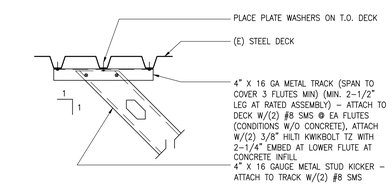

PERPENDICULAR TO DECKING

KICKER TRACK ATTACHMENT – DECK 1-1/2"=1'-0" 6

CONDITION	ANCHORAGE
CONC:	(2) 3/8"ø EXPANSION ANCHORS @ 24" O.C. PER SHEET S1.1
METAL:	(2) #10 SMS @ 16" O.C. MAX.
STRUCTURAL STEEL:	(2) HILTI EDS LOW VELOCITY POWER DRIVEN FASTENERS @ 24" O.C. – ICC ESR 1663

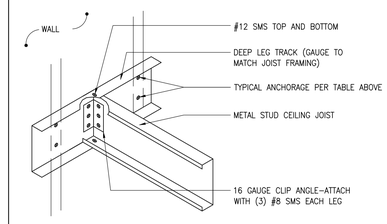

TYP. MTL. FRAMING LEDGER ATTACH. 1-1/2"=1'-0" 2

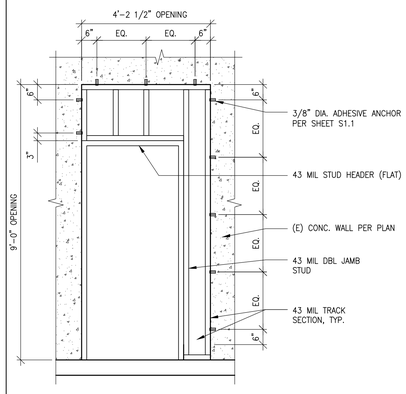

FRAMING ELEVATION @ (E) CONC. WALL 1/2"=1'-0" 9

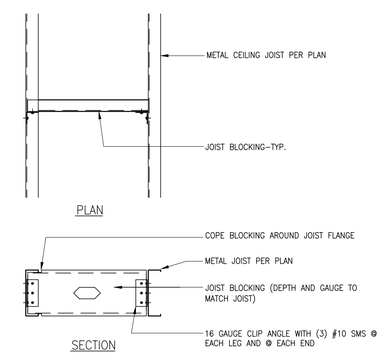

PLAN

SECTION

JOIST BLOCKING 1-1/2"=1'-0" 5

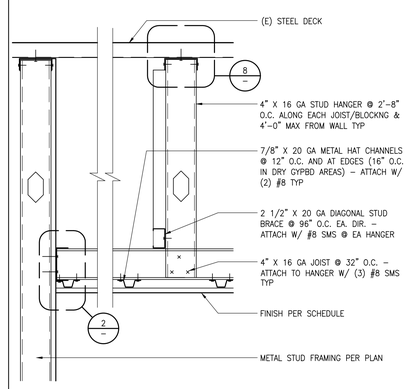

FRAMED CEILING 1-1/2"=1'-0" 1

METAL FRAMING NOTES

GALVANIZED METAL STUDS ARE / HAVE BEEN CHOSEN BASED ON I.C.C. REPORT NO. ESR-3064P. METAL STUDS SHALL BE MADE OF MINIMUM CHPS APPROVED STANDARD FOR RECYCLED CONTENT AND CONFORM TO ASTM A-653 (GALVANIZING).

METAL FRAMING SHALL BE THE FOLLOWING:

1. FOR INTERIOR WALLS/PARTITIONS WITH GYPSUM BOARD OR PLASTER ON EITHER ONE OR BOTH SIDES, USE THE FOLLOWING, U.O.N.:

   A. HEIGHTS UP TO 16'-0" 16 GA X 4" MIN DEEP STUDS @ 16" O.C.
   B. HEIGHTS UP TO 26'-0" 16 GA X 6" MIN DEEP STUDS @ 16" O.C.
   C. STUD AND JOIST FLANGE SHALL BE 1-5/8" DEEP
   D. TRACK FLANGE SHALL BE 1 1/4" MIN. DEEP

2. FOR EXTERIOR WALLS SEE STRUCTURAL DRAWINGS.

3. TOP AND BOTTOM TRACKS FOR ALL STUD WALLS/PARTITIONS SHALL BE THE SAME SIZE AND GAUGE AS STUDS, EXCEPT USE 16 GAUGE TRACKS AS INDICATED FOR BACKING, SLIP TRACKS, ETC.

4. WHERE CABINETS ARE TO BE ANCHORED TO STUD WALLS/PARTITIONS, FOLLOW TYPICAL DETAILS FOR STUDS AND BACKING.

5. ALL STUDS, JOISTS, AND TOP TRACK SHALL CONFORM WITH ASTM A-653, GRADE "A" FOR 20 GAUGE AND LIGHTER AND GRADE "C" FOR 18 GAUGE AND HEAVIER

TYPICAL CONNECTIONS U.O.N.:

1. TRACK TO STUD: #8 SMS EACH FLANGE
2. DOUBLE STUDS: #8 SMS @ 12" O.C.

   (WEB TO WEB) (STAGGERED)
3. BUILT UP CORNERS: #8 SMS @ 24" O.C.

4A. FACE OF MEMBER TO FLANGE OF MEMBER ≤ = 4": (2) #10 SMS

4B. FACE OF MEMBER TO FLANGE OF MEMBER > = 4": (3) #10 SMS

5. LAPPED CONNECTION: (3) #8 SMS (WEB TO WEB)
6. TOP PLATE TO JOIST: (2) #8 SMS
7. TOP PLATE TO BLOCKING: #8 SMS @ 4" O.C.
8. TOP PLATE TO RIDGE TRACK: #8 SMS @ 4"O.C.

MINIMUM ATTACHMENT OF APPROVED WALL COVERINGS TO PROVIDE CONTINUOUS ADEQUATE LATERAL SUPPORT FOR STUD FLANGES:

WALL COVERING WITH DIRECT ATTACHMENT:

APPROVED LATHS FOR PLASTER: PER CBC TABLE 2507.2. LATH, PLASTERING & ACCESSORIES

SINGLE AND DOUBLE-PLY GYPSUM WALLBOARD: PER CBC TABLE 2508.1 INSTALLATION OF GYPSUM CONSTRUCTION

PLYWOOD (NON-STRUCTURAL): #6 PHILLIPS BUGLE HEAD SMS (1/4" MIN PENETRATION) SPACED PER CBC SECTION 2304.9

SR

310 Nova Albion Way
San Rafael, CA 94903 415.492.3200

Terra Linda High School Modernization

310 Nova Albion Way
San Rafael, CA 94903
415.492.3200

Date	Issued For
1/17/2020	DSA Submittal

HED

417 Montgomery Street
Suite 400
San Francisco, California
94104 USA

(415) 981-2345

WWW.HED.DESIGN

© 2019

Framing Details - Soffit Framing

A-522

GENERAL NOTES

1. REFER TO SHEET A-601 FOR DOOR SCHEDULE, DOOR AND DOOR FRAME TYPES.
2. ALL SHEET METAL FLASHING THAT IS DIRECTLY EXPOSED TO THE WEATHER SHALL BE SHOP PRIMED AND SHOP PAINTED.
3. REFER TO SHEET A-521 AND A-522 FOR METAL FRAMING DETAILS.

DOOR NOTES

1. OVERALL DIMENSIONS SHOWN ARE NOMINAL DESIGN DIMENSIONS – SEE DETAILS AND FIELD VERIFY ROUGH OPENING DIMENSIONS TO DETERMINE OVERALL FABRICATION DIMENSIONS

2. HOLLOW METAL FRAME FACE DIMENSION IS 2 INCHES U.O.N. SEE DETAILS FOR FRAME PROFILES

3. ALL HOLLOW METAL FRAMES ARE FIELD PAINTED U.O.N.

4. CONNECT HOLLOW METAL FRAMES AND STOREFRONT LESS THAN 10' TO WALLS AS FOLLOWS:

METAL STUD: STEEL STUD ANCHORS @ 24" O.C. MAX ALL AROUND AND 9" MAX FROM ENDS – (3) PER JAMB MIN. (1) ANCHOR @ HEAD MIDSPAN @ DOORS WIDER THAN 3'–0". (4) #8 X 3/4" FLAT HEAD SHEET METAL SCREWS PER ANCHOR TYPICAL

STRUCTURAL STEEL: HILTI X–EW LOW VELOCITY POWDER ACTUATED THREADED STUDS @ 24" O.C. MAX. ALL AROUND & 6" FROM ENDS. – 2 MIN. PER SIDE – ICC ES ESR 2347

5. ALL DOORS ARE TO BE 1 3/4" THICK UNLESS OTHERWISE NOTED

6. WHERE HOLLOW METAL DOORS ARE PLACED IN ALUMINUM STOREFRONT, PROVIDE 'TUBULAR JAMBS' – TYP.

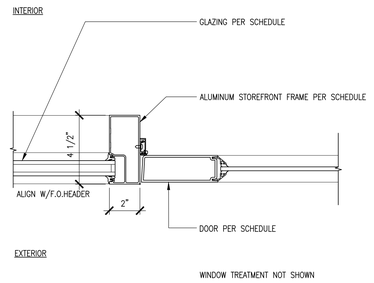

8 EXT. S.F. DOOR/WINDOW-JAMB
3" = 1'-0"

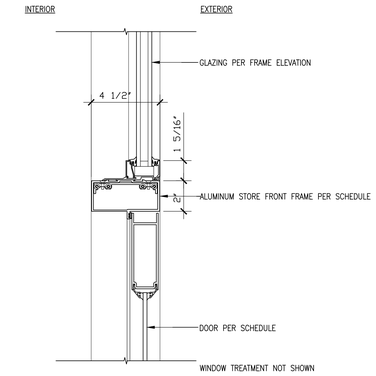

7 EXT. S.F. DOOR-HEAD/TRANSOM-SILL
3" = 1'-0"

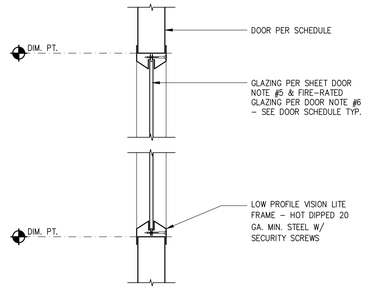

3 DOOR LITE
3" = 1'-0"

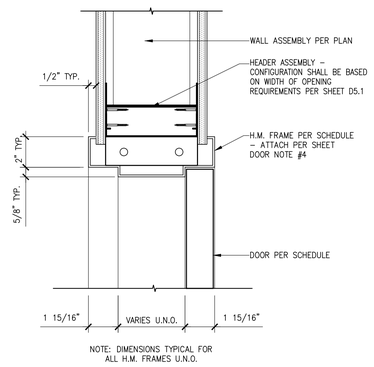

6 TYP. INTERIOR H.M. DOOR HEAD
3" = 1'-0"

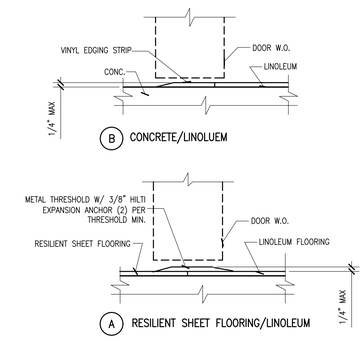

2 FLOOR TRANSITIONS
6" = 1'-0"

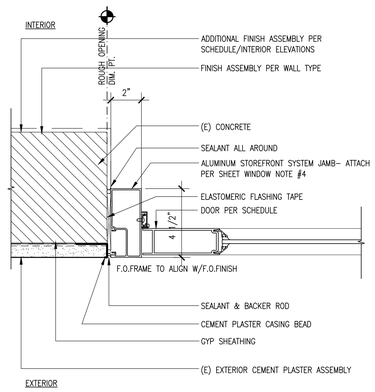

9 EXT. STOREFRONT DOOR JAMB
3" = 1'-0"

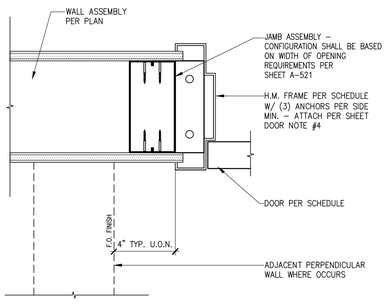

5 HM DOOR JAMB
3" = 1'-0"

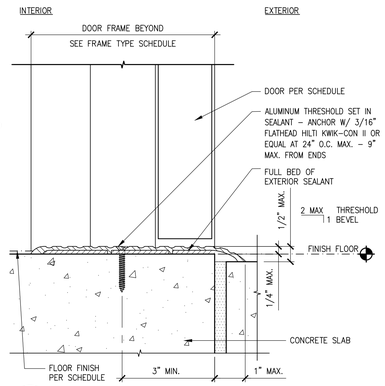

1 TYPICAL DOOR THRESHOLD
6" = 1'-0"

310 Nova Albion Way
San Rafael, CA 94903 415.492.3200

Terra Linda High School Modernization

310 Nova Albion Way
San Rafael, CA 94903
415.492.3200

Date	Issued For
1/17/2020	DSA Submittal
4/13/2020	BID SET #1

HED
417 Montgomery Street
Suite 400
San Francisco, California
94104 USA

(415) 981-2345

WWW.HED.DESIGN

© 2019

Door Details

A-561

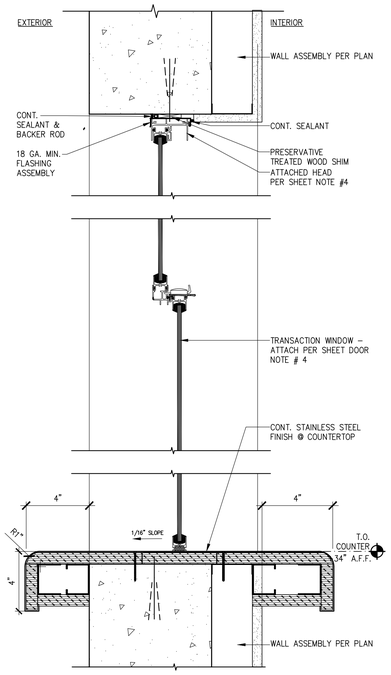

15 EXT. TRANSACTION WINDOW HEAD/SILL
3" = 1'-0"

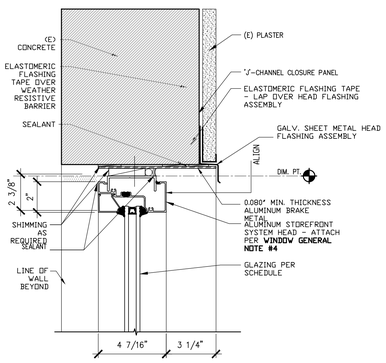

12 HORIZONTAL PASS THROUGH WINDOW AT ALUM. STOREFRONT HEAD
3" = 1'-0"

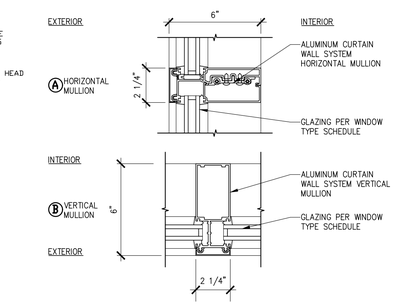

8 CURTAIN WALL MULLION
3" = 1'-0"

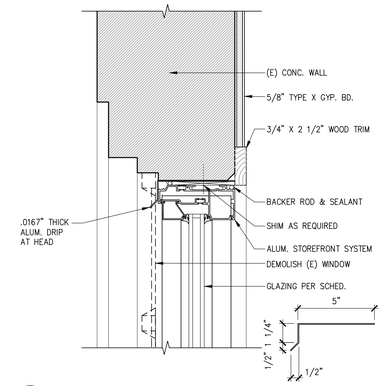

4 EXT. STOREFRONT HEAD/JAMB AT CONC.
3" = 1'-0"

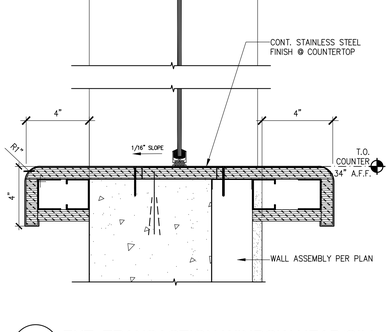

14 EXTERIOR TRANSACTION WINDOW JAMB
3" = 1'-0"

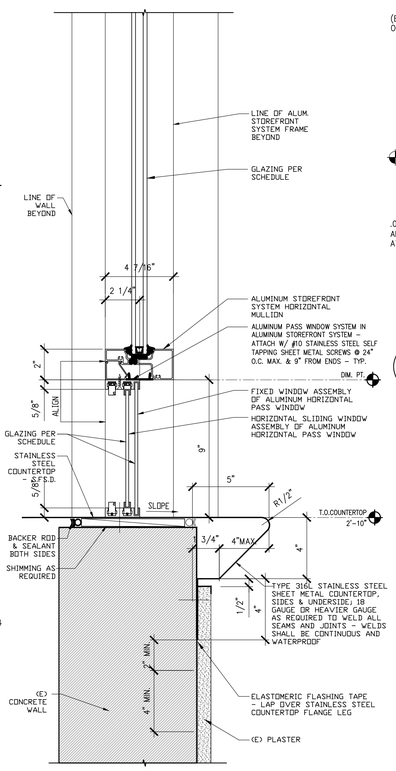

10 ALUM. HORIZONTAL PASS THROUGH WINDOW AT ALUM. STOREFRONT SILL
3" = 1'-0"

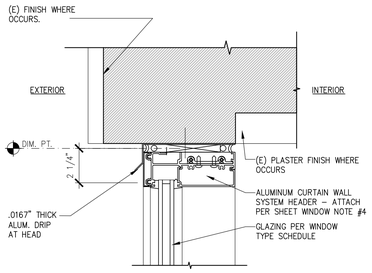

7 CURTAIN WALL HEAD
3" = 1'-0"

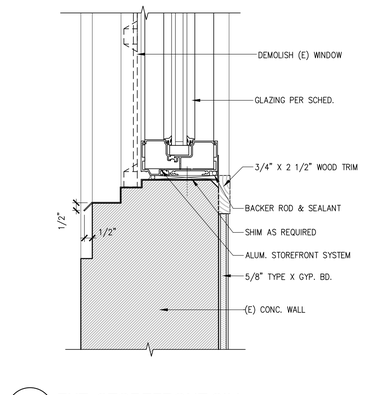

3 EXT. STOREFRONT SILL
3" = 1'-0"

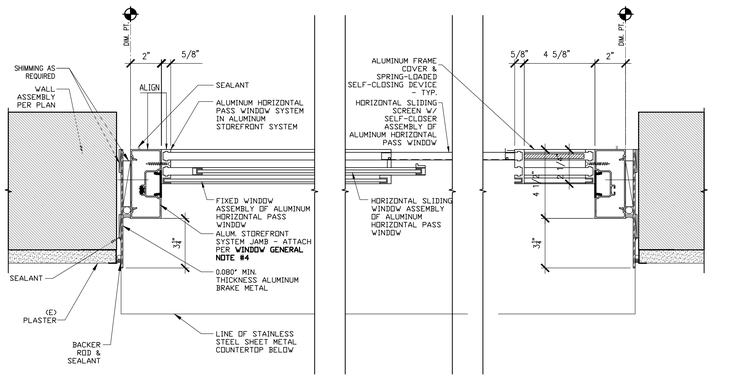

13 HORIZONTAL PASS THROUGH WINDOW AT ALUM. STOREFRONT JAMB
3"= 1'-0"

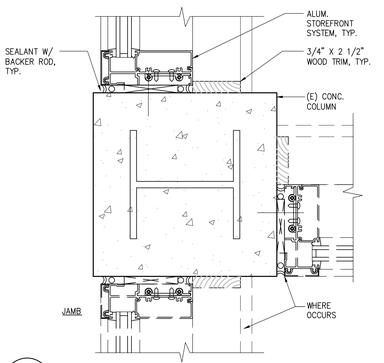

9 EXT. STOREFRONT AT (E) COLUMN
3" = 1'-0"

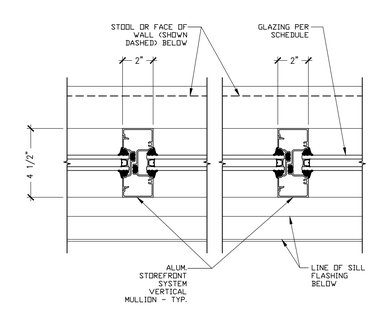

5 STOREFRONT MULLION
3" = 1'-0"

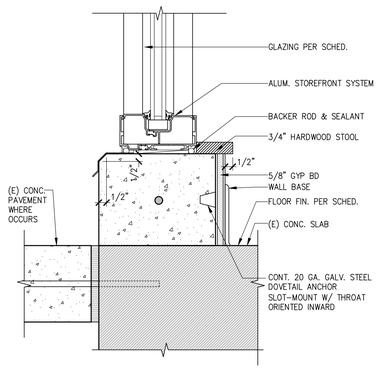

1 EXT. OPENING AT CONC. CURB
3" = 1'-0"

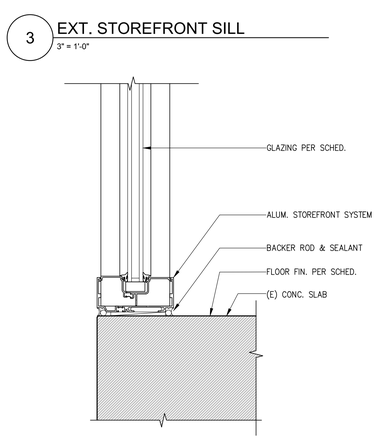

2 EXT. OPENING AT CONCRETE
SCALE

NOTES:

1. OVERALL DIMENSIONS SHOWN ARE NOMINAL DESIGN DIMENSIONS – SEE DETAILS AND FIELD VERIFY ROUGH OPENING DIMENSIONS TO DETERMINE OVERALL FABRICATION DIMENSIONS.
2. HOLLOW METAL FRAME FACE DIMENSION IS 2 INCHES U.O.N. SEE DETAILS FOR FRAME PROFILES.
3. ALL HOLLOW METAL FRAMES ARE FIELD PAINTED U.O.N.
4. CONNECT HOLLOW METAL FRAMES TO WALLS AS FOLLOWS: **METAL STUDS:** STEEL STUD ANCHORS @24" O.C. MAX. ALL AROUND AND 9" MAX. FROM ENDS. – (3) PER JAMB MIN. (1) ANCHOR @ HEAD MIDSPAN @ DOORS WIDER THAN 3'-0". (4) #8 X 3/4" FLAT HEAD SHEET METAL SCREWS PER ANCHOR TYPICAL. **CONCRETE:** 3/8" DIA. HILTI EXPANSION ANCHOR @ 24" O.C. MAX. – 6" FROM ENDS – (2) PER SIDE MIN.
5. ALL EXISTING FINISHES ARE TO BE PROTECTED IN PLACE IN THE DEMOLITION AND INSTALLATION OF WINDOWS

SR
310 Nova Albion Way
San Rafael, CA 94903 415.492.3200

Terra Linda High School Modernization

310 Nova Albion Way
San Rafael, CA 94903
415.492.3200

Date	Issued For
1/17/2020	DSA Submittal
4/13/2020	BID SET #1

HED
417 Montgomery Street
Suite 400
San Francisco, California
94104 USA
(415) 981-2345
WWW.HED.DESIGN

© 2019

Window Details

A-562

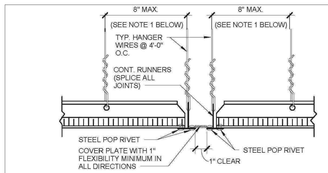

EXPANSION JOINT

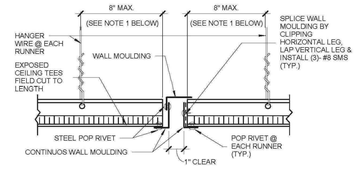

EXPANSION JOINT ALTERNATE

EXPANSION JOINTS AT THE INTERSECTION OF CORRIDORS AND AT JUNCTIONS OF CORRIDORS AND LOBBIES OR OTHER SIMILAR AREAS

NOTES:
1. PROVIDE #12 GAGE HANGER WIRES AT THE ENDS OF ALL MAIN AND CROSS RUNNERS WITHIN EIGHT (8) INCHES OF THE SUPPORT OR WITHIN ONE-FOURTH (1/4) OF THE LENGTH OF THE END TEE, WHICHEVER IS LESS; FOR THE PERIMETER OF THE CEILING AREA, PERIMETER WIRES ARE NOT REQUIRED WHEN THE LENGTH OF THE END TEE IS EIGHT (8) INCHES OR LESS.

Basis Document : DSA IR 25-2.13			Sheet No:
Sheet Title : SUSPENDED ACOUSTICAL CEILING - EXPANSION JOINT AT INTERSECTIONS	rev.	09-21-15	2.40

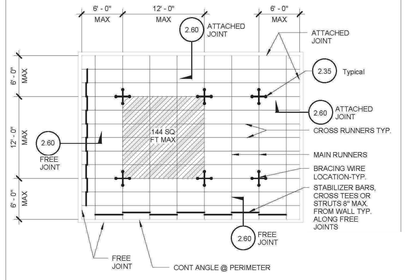

NOTE:
BRACING WIRES AND COMP. STRUT SHALL OCCUR AT EVERY 144 SQ. FT. MAX. IN ROOMS OVER 144 SQ. FT.

Basis Document : DSA IR 25-2.13			Sheet No:
Sheet Title : TYPICAL CEILING PLAN FOR 12'-0" x 12'-0" Brace Assembly Spacing	rev.	09-21-15	2.12

STRUCTURAL CONDITION OF FLOOR / ROOF ABOVE COMPRESSION STRUT	APPLICABLE DETAIL
METAL DECK	5.20
CONCRETE OVER METAL DECK	5.21
CONCRETE SLAB, BEAM, OR JOIST	5.30
STRUCTURAL STEEL	5.40
SAWN TIMBER WITH GYPSUM BOARD	5.50
SAWN TIMBER WITHOUT GYPSUM BOARD	5.60

Basis Document : DSA IR 25-2.13			Sheet No:
Sheet Title : COMPRESSION STRUT CONNECTION TO STRUCTURE - CONNECTION MATRIX	rev.	09-21-15	5.10

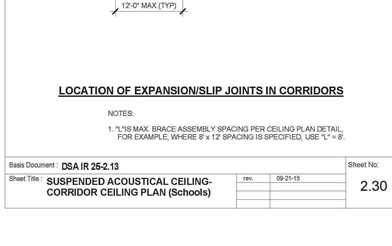

NOTES:
1. STRUTS SHALL NOT REPLACE HANGER WIRES.
2. THE MINIMUM ACCEPTABLE ANGLE IS DETERMINED SUCH THAT THE WIRES DO NOT INTERFER WITH THE RUNNERS, LIGHT FIXTURES, ETC. AND REMAIN STRAIGHT AND UNOBSTRUCTED.

Basis Document : DSA IR 25-2.13			Sheet No:
Sheet Title : SUSPENDED CEILING - SUSPENSION AND BRACING ASSEMBLY	rev.	09-21-15	2.35

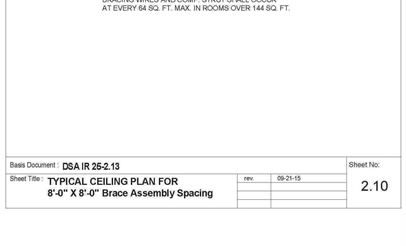

NOTE:
BRACING WIRES AND COMP. STRUT SHALL OCCUR AT EVERY 96 SQ. FT. MAX. IN ROOMS OVER 144 SQ. FT.

Basis Document : DSA IR 25-2.13			Sheet No:
Sheet Title : TYPICAL CEILING PLAN FOR 8'-0" x 12'-0" Brace Assembly Spacing	rev.	09-21-15	2.11

STRUCTURAL CONDITION OF FLOOR/ ROOF ABOVE SUSPENDED CEILING	APPLICABLE HANGER WIRE DETAIL	APPLICABLE BRACING WIRE DETAIL
METAL DECK	4.20	4.30
CONCRETE OVER METAL DECK	4.21	4.31
CONCRETE SLAB, BEAM, OR JOIST	4.22	4.32
STRUCTURAL STEEL	4.23	4.33
METAL STUD WALL	4.24	4.34
SAWN TIMBER	4.25, 4.29	4.35
WOOD I JOIST	4.26	4.36, 4.37
WOOD CHORD TRUSS	4.27, 4.29	4.38, 4.29
OPEN WEB STEEL JOIST	4.28, 4.29	4.39, 4.29

Basis Document : DSA IR 25-2.13			Sheet No:
Sheet Title : HANGER AND BRACING WIRE CONNECTION MATRIX	rev.	09-21-15	4.11

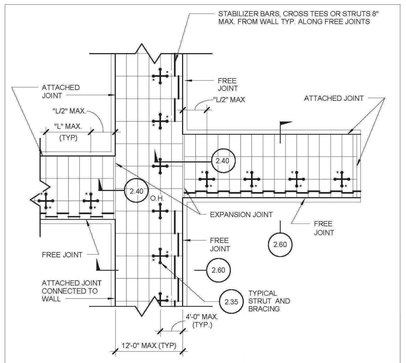

LOCATION OF EXPANSION/SLIP JOINTS IN CORRIDORS

NOTES:
1. "L"IS MAX. BRACE ASSEMBLY SPACING PER CEILING PLAN DETAIL FOR EXAMPLE, WHERE 8' x 12' SPACING IS SPECIFIED, USE "L" = 8'.

Basis Document : DSA IR 25-2.13			Sheet No:
Sheet Title : SUSPENDED ACOUSTICAL CEILING- CORRIDOR CEILING PLAN (Schools)	rev.	09-21-15	2.30

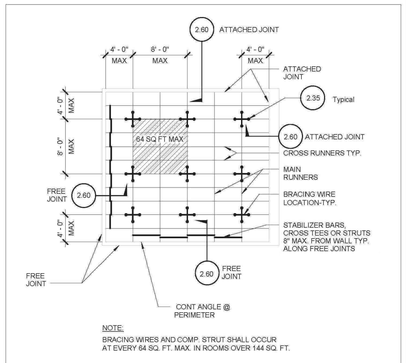

NOTE:
BRACING WIRES AND COMP. STRUT SHALL OCCUR AT EVERY 64 SQ. FT. MAX. IN ROOMS OVER 144 SQ. FT.

Basis Document : DSA IR 25-2.13			Sheet No:
Sheet Title : TYPICAL CEILING PLAN FOR 8'-0" X 8'-0" Brace Assembly Spacing	rev.	09-21-15	2.10

COMPRESSION STRUT TABLE

EMT COMPRESSION STRUT	MAXIMUM LENGTH
1/2" DIAMETER EMT (0.042" WALL THICKNESS)	5'-10"
3/4" DIAMETER EMT (0.049" WALL THICKNESS)	7'-8"
1" DIAMETER EMT (0.057" WALL THICKNESS)	9'-9"
1 1/4" DIAMETER EMT (0.065" WALL THICKNESS)	12'-9"
1 1/2" DIAMETER EMT (0.065" WALL THICKNESS)	14'-9"
2" DIAMETER EMT (0.065" WALL THICKNESS)	18'-10"

CHANNEL COMPRESSION STRUT	MAXIMUM LENGTH
250S125-33	5'-0"
250S137-33	6'-10"
362S137-33	8'-0"
250137-43	8'10"
400S137-43	10'-10"

Basis Document : DSA IR 25-2.13			Sheet No:
Sheet Title : COMPRESSION STRUT TABLE	rev.	09-21-15	3.21

DSA IR 25-2.13 METAL SUSPENSION SYSTEMS FOR LAY-IN PANEL CEILINGS

1. CEILING SYSTEM GENERAL NOTES:

1.01 Ceiling system components shall comply with ASTM C635-07 and Section 5.1 of ASTM E580-10a.

1.02 The ceiling grid system must be rated heavy duty as defined by ASTM C635-08
.

1.03 Ceiling systems. The following ceiling system(s) is/are part of the scope of this project:

Manufacturer's Name ARMSTRONG
Product Name and Evaluation Report Type/Number PRELUDE XL ICC ESR 1308
Manufacturer's Model Number - main runner 7301 HD,
Manufacturer's catalog number - cross runner XL 8320 MRC

1.04 Seismic Wall Clip:

Manufacturer's Model BERC 2

1.05 Ceiling panels shall not support any light fixtures, air terminals or devices.

1.06 For ceiling installations utilizing acoustical tile panels of mineral or glass fiber, it is not mandatory to provide 3/4" clearance between the acoustical tile panels and the wall on the sides of the ceiling which are free to slip. For all other ceiling panel types, provide 3/4" clearance between the ceiling panel and the wall on the sides of the ceiling free to slip.

2. MATERIALS:

2.01 Ceiling wire shall be Class 1 zinc coated (galvanized) carbon steel conforming to ASTM A641-09a. Wire shall be #12 gage (0.106" diameter) with soft temper and minimum tensile strength = 70 ksi.

2.02 Galvanized sheet steel (including that used for metal stud and track compression struts/post) shall conform to ASTM A653-11, or other equivalent sheet steel listed in Section A2.1 of the North American Specification for the Design of Cold-Formed Steel Structural Members 2007, including supplement 2 dated 2010 (AISI S100-07/S2-10). Material 43 mil (18 gage) and lighter shall have minimum yield strength of 33 ksi. Material 54 mil (16 gage) and heavier shall have a minimum yield strength of 50 ksi.

2.03 Electrical metallic tube (EMT) shall be ANSI C80.3/UL 797 carbon steel with G90 galvanizing. EMT shall have minimum yield strength (Fy) of 30 ksi and minimum ultimate strength (Fu) of 48 ksi.

3. ATTACHMENT OF HANGER AND BRACING WIRES:

3.01 Separate all ceiling hanger and bracing wires at least six (6) inches from all unbraced ducts, pipes, conduit, etc.

3.02 Hanger and bracing wires shall not attach to or bend around obstructions including but not limited to: piping, ductwork, conduit and equipment.

3.03 Hanger wires that are more than one (horizontal) in six (vertical) out of plumb shall have counter-sloping wires.

3.04 Slack safety wires shall be considered hanger wires for installation and testing requirements.

3.05 Hanger and bracing wire anchorage to the structure shall be installed in such a manner that the direction of the anchorage aligns closely with the direction of the wire. (e.g. bracing wire ceiling clips must be bent as shown in the details and rotated as required to align closely with the direction of the wire, screw eyes in wood must be installed so they align closely with the direction of the wire, etc.)

4. FASTENERS AND WELDING:

4.01 Sheet metal screws shall comply with ASTM C1513-10, ASME B18.6.4-89 (R2005). Penetration of screws through joined material shall not be less than three exposed threads.

4.02 Expansion anchors shall be:

Manufacturer's Name HILTI
Product Name and Evaluation Report Type/Number KWIK BOLT TZ ESR 1917
Manufacturer's Load for each size specified (per CBC 1913A.7.2) SEE 12/SI

4.03 Power-Actuated Fasteners shall be:

Manufacturer's Name HILTI
Product Name and Evaluation Report Type/Number X-U or X-P ESR 2269.

4.04 If not otherwise specified in the evaluation report, power-actuated fasteners installed in steel shall be installed so the entire pointed end of the fastener is driven through the steel member.

4.05 Power-actuated fasteners in concrete are not permitted for bracing wires.

4.06 Concrete reinforcement and prestressing tendons shall be located by non-destructive means prior to installing post - installed anchor.

4.07 Welding shall be in accordance with AWS D1.3 using E60XX series electrodes.

5. TESTING: All field testing must be performed in the presence of the project inspector.

5.01 Post-installed anchors in concrete used to support hanger wires shall be tested at a frequency of 10 percent. Power actuated fasteners in concrete shall be field tested for 200 lbs. in tension. All other post-installed anchors in concrete shall be tested in accordance with CBC Section 1913A.7.

5.02 Post-installed anchors in concrete used to attach bracing wires shall be tested at a frequency of 50 percent in accordance with CBC Section 1913A.7.

6. LIGHT FIXTURES:

6.01 All light fixtures shall be positively attached to the ceiling suspension systems by mechanical means to resist a horizontal force equal to the weight of the fixture. A minimum of two screws or approved fasteners are required at each light fixture, per ASTM E580, Section 5.3.1.

6.02 Surface-mounted light fixtures shall be attached to the main runner with at least two positive clamping devices. The clamping device shall completely surround the supporting ceiling runner and be made of steel with a minimum thickness of #14 gage. Rotational spring catches do not comply. A #12 gage slack safety wire shall be connected from each clamping device to the structure above. Provide additional supports when light fixtures are eight (8) feet or longer or exceed 56 lb. Maximum spacing between supports shall not exceed eight (8) feet.

6.03 Light fixtures weighing less than or equal to 10 lb. shall have a minimum of one (1) #12 gage slack safety wire connected from the fixture housing to the structure above.

6.04 Light fixtures weighing less than or equal to 10 lb. shall have a minimum of one (1) #12 gage slack safety wire connected from the fixture housing to the structure above.

6.05 Light fixtures weighing greater than 10 lb. but less than or equal to 56 lbs. may be supported directly on the ceiling runners, but they shall have a minimum of two (2) #12 gage slack safety wires connected from the fixture housing at diagonal corners to the structure above.

Exception: All light fixtures greater than two by four feet weighing less than 56 lbs. shall have a #12 gage slack safety wire at each corner.

6.06 All Light fixtures weighing greater than 56 lb. shall be independently supported by not less than four (4) taut #12 gage hanger wires (one at each corner) attached from the fixture housing to the structure above or other approved hangers. The four (4) taut #12 gage wires or other approved hangers, including their attachment to the structure above, shall be capable of supporting four (4) times the weight of the fixture.

7. SERVICES WITHIN THE CEILING:

7.01 All flexible sprinkler hose fitting mounting brackets, ceiling-mounted air terminals or other services shall be positively attached to the ceiling suspension systems by mechanical means. Screws or approved fasteners are required. A minimum of two attachments are required at each component.

7.02 Ceiling-mounted air terminals or other services weighing less than or equal to 20 lb. shall have one (1) #12 gage slack safety wire attached from the terminal or service to the structure above.

7.03 Flexible sprinkler hose fittings, ceiling-mounted air terminals or other services weighing more than 20 lb. but less than or equal to 56 lb. shall have two (2) #12 gage slack safety wires (at diagonal corners) connected from the terminal or service to the structure above.

7.04 Flexible sprinkler hose fittings, ceiling-mounted air terminals or other services weighing more than 56 lb. shall be supported directly from the structure above by not less than four (4) taut #12 gage hanger wires attached from the terminal or service to the structure above or other approved hangers.

8. OTHER DEVICES WITHIN THE CEILING:

8.01 All lightweight miscellaneous devices, such as strobe lights, occupancy sensors, speakers, exit signs, etc., shall be attached to the ceiling grid. In addition, devices weighing more than 10 lbs. shall have a #12 gage slack safety wire anchored to the structure above. Devices weighing more than 20 lb. shall be supported independently from the structure above.

SHEET NOTES

1. ALL NOTES AND DRAWINGS ARE PER DSA IR 25-2.13.

SR
310 Nova Albion Way
San Rafael, CA 94903 415.492.3200

Terra Linda High School Modernization

310 Nova Albion Way
San Rafael, CA 94903
415.492.3200

Date	Issued For
1/17/2020	DSA Submittal

HED
417 Montgomery Street
Suite 400
San Francisco, California
94104 USA
(415) 981-2345
WWW.HED.DESIGN

© 2019

Details Suspended Ceiling Assembly Typical

A-571

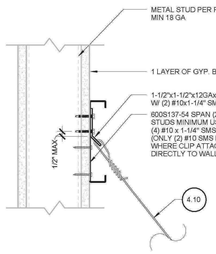

Basis Document : DSA IR 25-2.13 | Sheet No: 4.34

Sheet Title : BRACING WIRE CONNECTION TO METAL STUD WALL

rev.	09-21-15

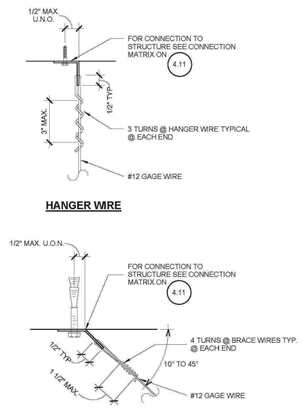

Basis Document : DSA IR 25-2.13 | Sheet No: 4.10

Sheet Title : HANGER AND BRACING WIRE CONNECTION - TYPICAL WIRE TURNS

rev.	09-21-15

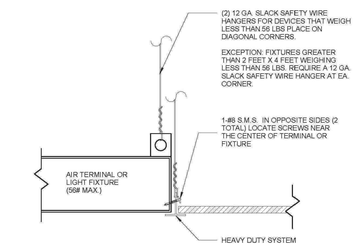

Basis Document : DSA IR 25-2.13 | Sheet No: 2.80

Sheet Title : SUSPENDED ACOUSTICAL CEILING - LIGHT FIXTURES/ AIR TERMINAL SUPPORT DETAIL

rev.	09-21-15
rev.	02-10-16

SHEET NOTES

1. ALL NOTES AND DRAWINGS ARE PER DSA IR 25-2.13.

SR

310 Nova Albion Way
San Rafael, CA 94903 415.492.3200

Terra Linda High School
Modernization

310 Nova Albion Way
San Rafael, CA 94903
415.492.3200

Date	Issued For
1/17/2020	DSA Submittal

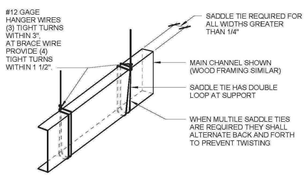

TYPICAL SADDLE TIE DETAIL

HANGER WIRE CONDITION SHOWN. BRACE WIRE CONDITION SIMILAR

Basis Document : DSA IR 25-2.13 | Sheet No: 4.29

Sheet Title : TYPICAL SADDLE TIE DETAIL

rev.	09-21-15

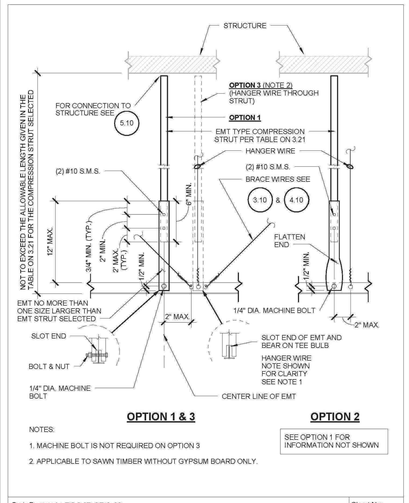

OPTION 1 & 3

OPTION 2

SEE OPTION 1 FOR INFORMATION NOT SHOWN

NOTES:

1. MACHINE BOLT IS NOT REQUIRED ON OPTION 3
2. APPLICABLE TO SAWN TIMBER WITHOUT GYPSUM BOARD ONLY.

Basis Document : DSA IR 25-2.13 | Sheet No: 3.20

Sheet Title : SUSPENDED ACOUSTICAL CEILING - EMT TYPE STRUT

rev.	09-21-15

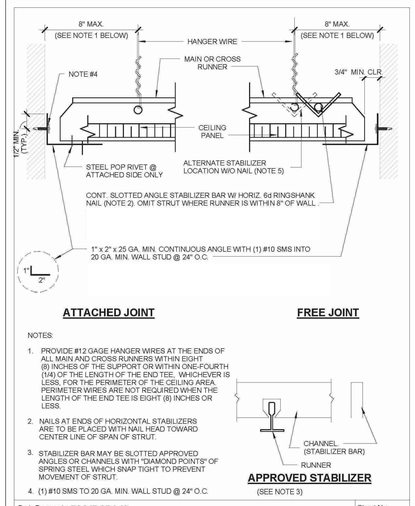

ATTACHED JOINT **FREE JOINT**

NOTES:

1. PROVIDE #12 GAGE HANGER WIRES AT THE ENDS OF ALL MAIN AND CROSS RUNNERS WITHIN EIGHT (8) INCHES OF THE SUPPORT OR WITHIN ONE-FOURTH (1/4) OF THE LENGTH OF THE END TEE, WHICHEVER IS LESS, FOR THE PERIMETER OF THE CEILING AREA. PERIMETER WIRES ARE NOT REQUIRED WHEN THE LENGTH OF THE END TEE IS EIGHT (8) INCHES OR LESS.
2. NAILS AT ENDS OF HORIZONTAL STABILIZERS ARE TO BE PLACED WITH NAIL HEAD TOWARD CENTER LINE OF SPAN OF STRUT.
3. STABILIZER BAR MAY BE SLOTTED APPROVED ANGLES OR CHANNELS WITH "DIAMOND POINTS" OF SPRING STEEL WHICH SNAP TIGHT TO PREVENT MOVEMENT OF STRUT.
4. (1) #10 SMS TO 20 GA. MIN. WALL STUD @ 24" O.C.

APPROVED STABILIZER

(SEE NOTE 3)

Basis Document : DSA IR 25-2.13 | Sheet No: 2.60

Sheet Title : CEILING PERIMETER

rev.	09-21-15

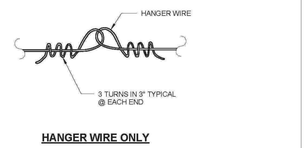

HANGER WIRE ONLY

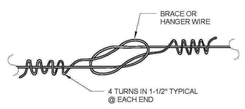

HANGER OR BRACE WIRE

NOTES:

WIRE SPLICES ARE SHOWN LOOSELY TIED FOR ILLUSTRATIVE PURPOSES ONLY AND SHALL BE DRAWN TIGHT TO COMPLETE INSTALLATION WHEN CONSTRUCTED.

Basis Document : DSA IR 25-2.13 | Sheet No: 6.10

Sheet Title : CEILING WIRE SPLICES

rev.	09-21-15

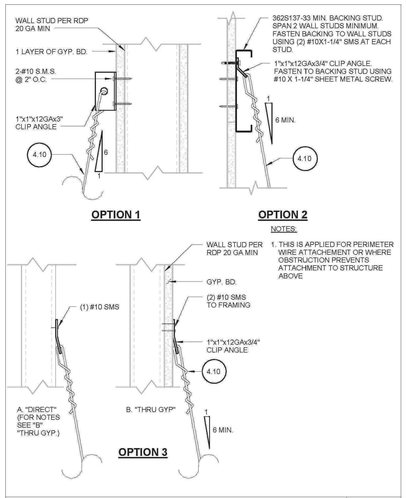

Basis Document : DSA IR 25-2.13 | Sheet No: 4.24

Sheet Title : HANGER WIRE CONNECTION TO METAL STUD WALL

rev.	09-21-15

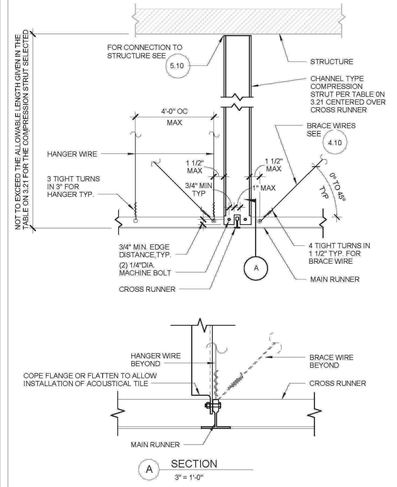

Basis Document : DSA IR 25-2.13 | Sheet No: 3.10

Sheet Title : SUSPENDED ACOUSTICAL CEILING - CHANNEL TYPE STRUT

rev.	09-21-15

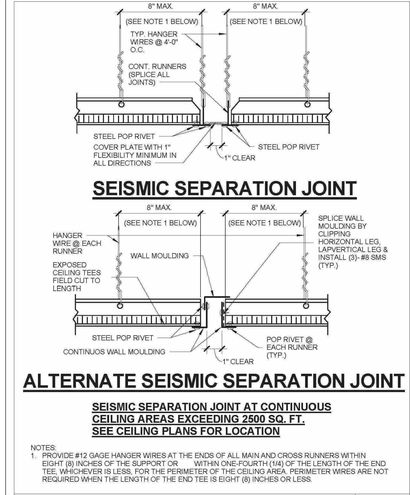

SEISMIC SEPARATION JOINT AT CONTINUOUS CEILING AREAS EXCEEDING 2500 SQ. FT. SEE CEILING PLANS FOR LOCATION

NOTES:

1. PROVIDE #12 GAGE HANGER WIRES AT THE ENDS OF ALL MAIN AND CROSS RUNNERS WITHIN EIGHT (8) INCHES OF THE SUPPORT OR WITHIN ONE-FOURTH (1/4) OF THE LENGTH OF THE END TEE, WHICHEVER IS LESS, FOR THE PERIMETER OF THE CEILING AREA. PERIMETER WIRES ARE NOT REQUIRED WHEN THE LENGTH OF THE END TEE IS EIGHT (8) INCHES OR LESS.

Basis Document : DSA IR 25-2.13 | Sheet No: 2.45

Sheet Title : SUSPENDED ACOUSTICAL CEILING - SEISMIC SEPARATION JOINT

rev.	09-21-15

HED

417 Montgomery Street
Suite 400
San Francisco, California
94104 USA

(415) 981-2345

WWW.HED.DESIGN

© 2019

Details Suspended Ceiling Assembly Typical - Part B

A-572

SHEET NOTES

1. ALL NOTES AND DRAWINGS ARE PER DSA IR 25-2.13.

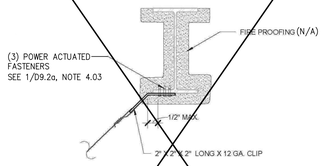

BRACING WIRE

NOTES :

1. BEAM FLANGE THICKNESS SHALL NOT BE LESS THAN 3/16".
2. RDP IN RESPONSIBLE CHARGE, IOR, AND CONTRACTOR SHALL VERIFY THAT NO PAF IS INSTALLED IN THE PROTECTED ZONE OF ANY STEEL MEMBER. SEE ANSI/AISC 341-10
3. REFER TO 4.10 FOR ADDITIONAL DETAILS

Basis Document : DSA IR 25-2.13 | Sheet No: 4.33

Sheet Title: BRACING WIRE CONNECTION TO STRUCTURAL STEEL

rev.	09-21-15

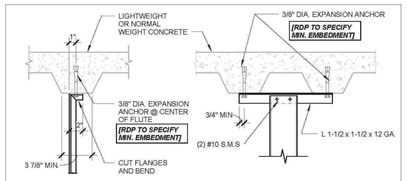

OPTION 1 **OPTION 2**

CHANNEL STRUT

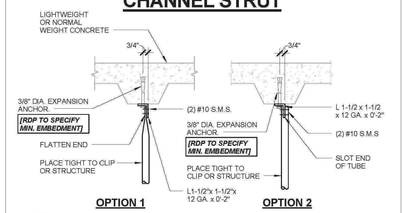

OPTION 1 **OPTION 2**

NOTES:
1. POST INSTALLED ANCHORS TO BE PLACED NO MORE THAN 1" OFFSET FROM CENTERLINE OF DECK LOW FLUTE
2. TEST POST INSTALLED ANCHORS IN ACCORDANCE WITH CEILING NOTE 5.01

TUBE STRUT

Basis Document : DSA IR 25-2.13 | Sheet No: 5.21

Sheet Title: STRUT CONNECTION TO CONCRETE OVER METAL DECK

rev.	09-21-15

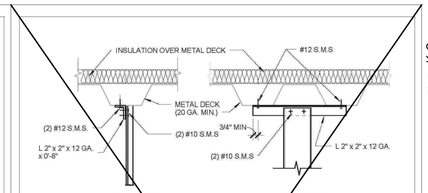

OPTION 1 **OPTION 2**

CHANNEL STRUT

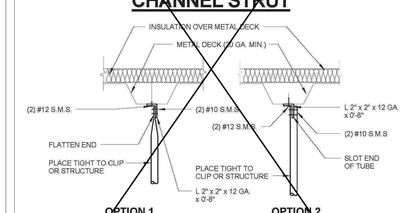

OPTION 1 **OPTION 2**

TUBE STRUT

Basis Document : DSA IR 25-2.13 | Sheet No: 5.20

Sheet Title: STRUT CONNECTION TO METAL DECK

rev.	09-21-15

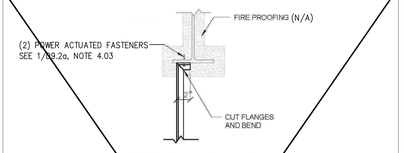

CHANNEL STRUT

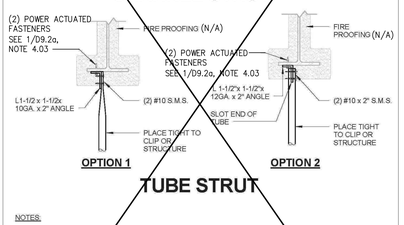

OPTION 1 **OPTION 2**

TUBE STRUT

NOTES:

1. STRUCTURAL STEEL MEMBER SHALL NOT BE LESS THAN 3/16".
2. RDP IN RESPONSIBLE CHARGE, I.O.R. AND CONTRACTOR SHALL VERIFY THAT NO PAF IS INSTALLED IN THE PROTECTED ZONE OF ANY STEEL MEMBER. SEE ANSI/AISC 341-10.
3. REFER TO 5.20 AND 5.30 FOR ADDITIONAL INFORMATION.

Basis Document : DSA IR 25-2.13 | Sheet No: 5.40

Sheet Title: STRUT CONNECTION TO STRUCTURAL STEEL

rev.	09-21-15

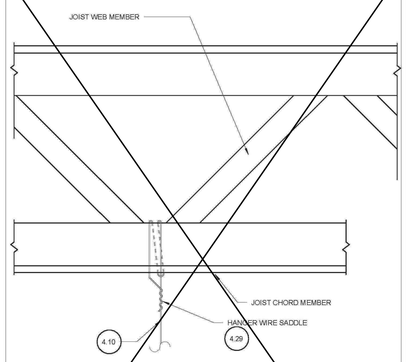

Basis Document : DSA IR 25-2.13 | Sheet No: 4.28

Sheet Title: HANGER WIRE CONNECTION TO OPEN WEB STEEL JOIST

rev.	09-21-15

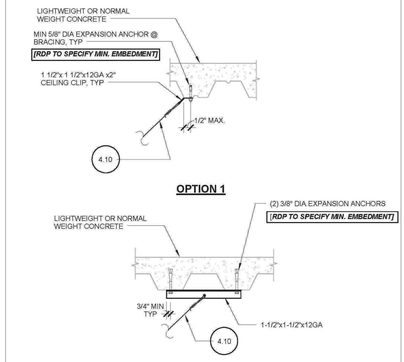

OPTION 1

OPTION 2

NOTES:

1. TEST POST INSTALLED ANCHORS IN ACCORDANCE WITH CEILING NOTE 5.02
2. REFER TO 4.10 FOR ADDITIONAL DETAILS
3. POST INSTALLED ANCHORS TO BE PLACED NO MORE THAN 1" OFFSET FROM CENTERLINE OF DECK LOW FLUTE.

Basis Document : DSA IR 25-2.13 | Sheet No: 4.31

Sheet Title: BRACING WIRE CONNECTION TO CONCRETE OVER METAL DECK

rev.	09-21-15

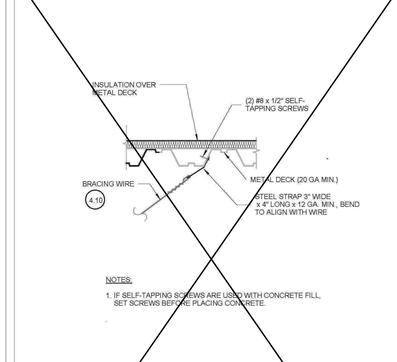

NOTES:

1. IF SELF-TAPPING SCREWS ARE USED WITH CONCRETE FILL, SET SCREWS BEFORE PLACING CONCRETE.

Basis Document : DSA IR 25-2.13 | Sheet No: 4.30

Sheet Title: BRACING WIRE CONNECTION AT METAL DECK

rev.	09-21-15

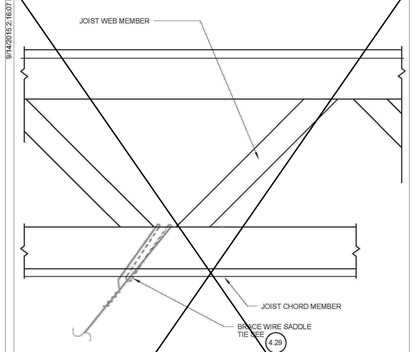

NOTES:

1. BRACE WIRE SHALL ALIGN PARALLEL WITH THE TRUSS BOTTOM CHORD

Basis Document : DSA IR 25-2.13 | Sheet No: 4.39

Sheet Title: BRACE WIRE CONNECTION TO OPEN-WEB STEEL JOIST

rev.	09-21-15

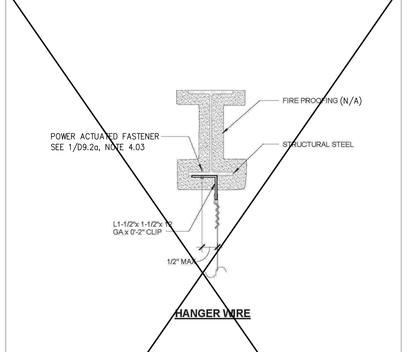

HANGER WIRE

NOTES :

1. BEAM FLANGE THICKNESS SHALL NOT BE LESS THAN 3/16".
2. RDP IN RESPONSIBLE CHARGE, IOR AND CONTRACTOR SHALL VERIFY THAT NO PAF IS INSTALLED IN THE PROTECTED ZONE OF ANY STEEL MEMBER. SEE ANSI/AISC 341-10
3. REFER TO 4.10 FOR ADDITIONAL DETAILS

Basis Document : DSA IR 25-2.13 | Sheet No: 4.23

Sheet Title: HANGER WIRE CONNECTION TO STRUCTURAL STEEL

rev.	09-21-15

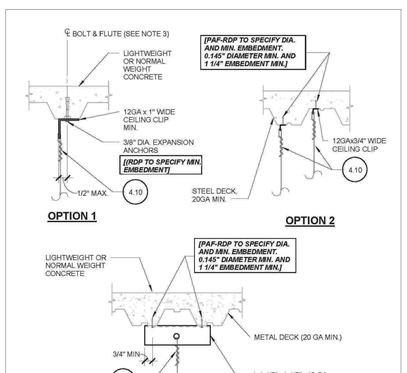

OPTION 1 **OPTION 2**

OPTION 3

NOTES:

1. REFER TO 4.10 FOR ADDITIONAL DETAILS.
2. POST INSTALLED ANCHORS TO BE PLACED NO MORE THAN 1" OFFSET FROM CENTERLINE OF DECK LOW FLUTE
3. TEST POST INSTALLED ANCHORS IN ACCORDANCE WITH CEILING NOTE 5.01.

Basis Document : DSA IR 25-2.13 | Sheet No: 4.21

Sheet Title: HANGER WIRE CONNECTION TO CONCRETE OVER METAL DECK

rev.	09-21-15

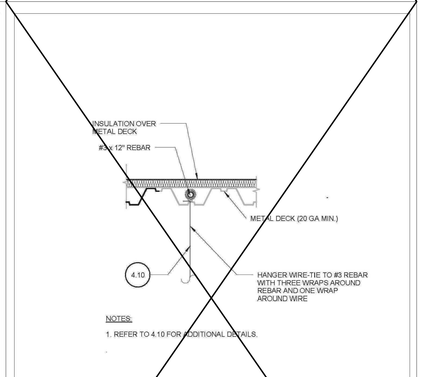

NOTES:

1. REFER TO 4.10 FOR ADDITIONAL DETAILS.

Basis Document : DSA IR 25-2.13 | Sheet No: 4.20

Sheet Title: HANGER WIRE CONNECTION TO METAL DECK

rev.	09-21-15

9/14/2015 2:16:07 PM

SR
310 Nova Albion Way
San Rafael, CA 94903 415.492.3200

Terra Linda High School Modernization

310 Nova Albion Way
San Rafael, CA 94903
415.492.3200

Date	Issued For
1/17/2020	DSA Submittal

HED
417 Montgomery Street
Suite 400
San Francisco, California
94104 USA
(415) 981-2345
WWW.HED.DESIGN

© 2019

Details Suspended Ceiling Assembly Metal Deck, Steel, Comp Deck

A-573

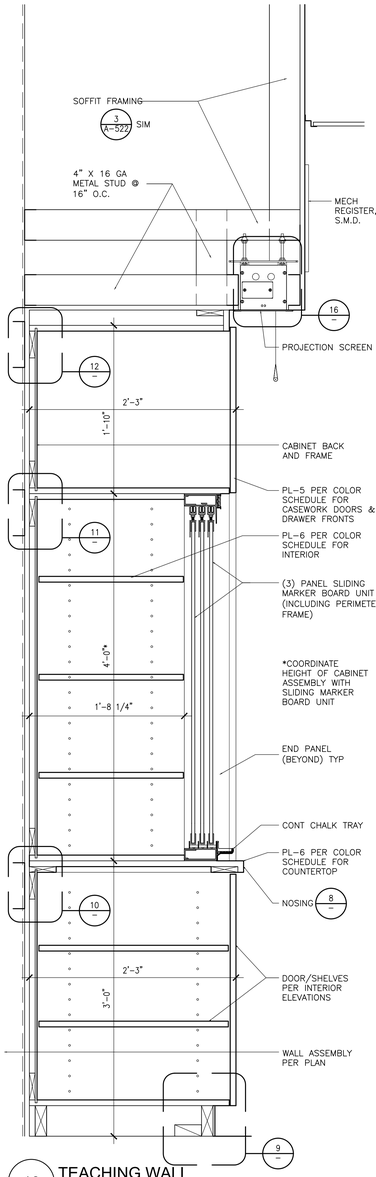

18 TEACHING WALL
1-1/2" = 1'-0"

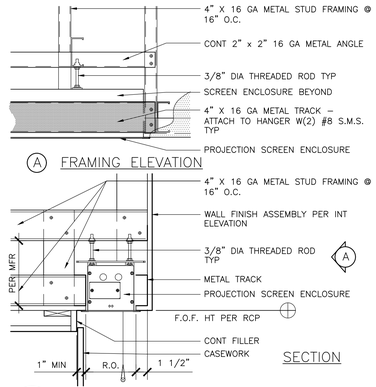

16 PROJECTION SCREEN
3" = 1'-0"

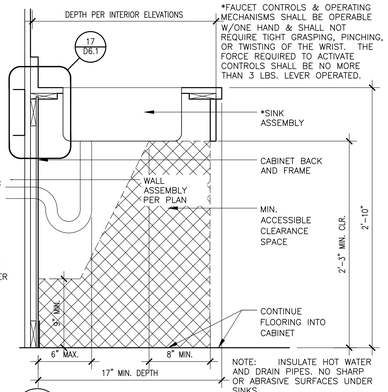

15 ACCESSIBLE SINK CABINET
1-1/2" = 1'-0"

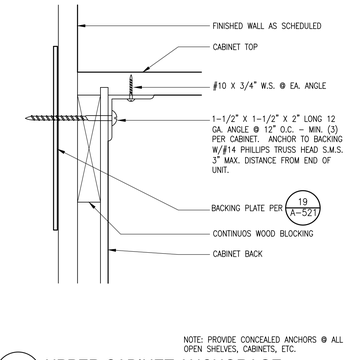

NOTE: PROVIDE CONCEALED ANCHORS @ ALL OPEN SHELVES, CABINETS, ETC.

12 UPPER CABINET ANCHORAGE
6" = 1'-0"

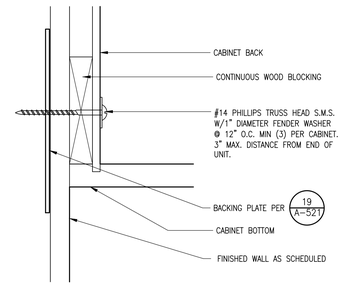

NOTE: PROVIDE CONCEALED ANCHORS @ ALL OPEN SHELVES, CABINETS, ETC.

11 UPPER CABINET ANCHORAGE II
6" = 1'-0"

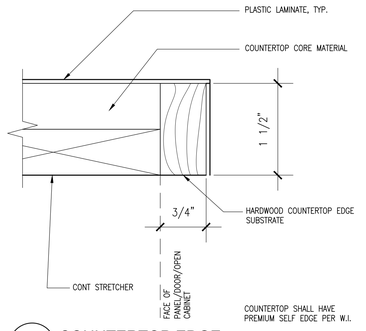

8 COUNTERTOP EDGE
NTS

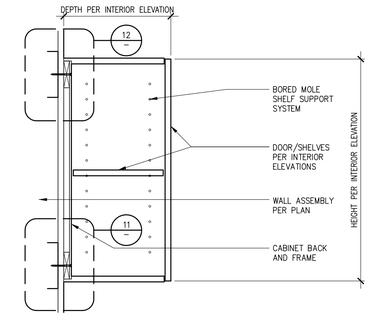

7 UPPER CABINET
1-1/2" = 1'-0"

1. GRADE: CUSTOM, EXCEPT AS HEREIN MODIFIED.
2. W.I. CONSTRUCTION STYLE: STYLE A FRAMELESS.
3. W.I. CONSTRUCTION TYPE: TYPE I MULTIPLE SELF-SUPPORTING UNITS RIGIDLY JOINED TOGETHER.
4. W.I. DOOR AND DRAWER FRONT STYLE: FLUSH OVERLAY.
5. PROVIDE LOCKS ON ALL DOORS AND DRAWERS, TO BE KEYED THE SAME WITHIN EACH ROOM U.O.N.
6. PROVIDE ATTACHMENTS PER CASEWORK MOUNTING DETAILS AND PER BACKING PLATE SCHEDULE. SEE "CASEWORK ATTACHMENT" SCHEDULE, SEE DETAIL 5/–
7. BASE FOR FLOOR MOUNTED CASEWORK TO MATCH HEIGHT AND MATERIAL MOUNTED ON WALL U.O.N. PROVIDE FINISH BASE MATERIAL PER FINISH SCHEDULE AND EXTENDING TO WALLS AT ALL CABINET RETURNS, BACK PANELS AND END PANELS.
8. SHELVING: COMPLY WITH THE FOLLOWING, FOR A LOAD FACTOR OF 50#/S.F. EXCEPT AS MODIFIED BELOW:
   A. FIXED SHELVING BETWEEN VERTICAL MEMBERS OF THE CABINET BODY, AND ADJUSTABLE SHELVING CONCEALED:
      1) USE 3/4" MDF UP TO 25" LONG.
      2) USE 1" MDF UP TO 34" LONG.
      3) USE 3/4" COMBINATION CORE PLYWOOD WITH HARDWOOD VENEER 2 SIDES UP TO 46" LONG.
   B. ADJUSTABLE SHELVING, EXPOSED:
      1) USE 3/4" 3 OR 5 PLY PANELS, COMBINATION CORE WITH HARDWOOD VENEER PLIES UP TO 40" LONG.
9. FILLER PANELS: FOR SPACES OF 3" OR MORE, USE FLUSH-TYPE FILLER PANELS, WITH SURFACES AND EDGING TO MATCH CABINETS.
10. PRE-CUT OPENINGS: FABRICATE WORK WITH PRE-CUT OPENINGS, WHEREVER POSSIBLE, TO RECEIVE HARDWARE AND SIMILAR ITEMS. LOCATE OPENINGS ACCURATELY AND USE TEMPLATES OR ROUGH-IN DIAGRAMS FOR PROPER SIZE AND SHAPE. SMOOTH THE EDGES OF CUTOUTS AND WHERE LOCATED IN COUNTER TOPS AND SIMILAR EXPOSURES, SEAL THE EDGES OF CUTOUTS WITH A WATER-RESISTANT COATING.
11. PROVIDE CUTOUTS IN CASEWORK FOR ELECTRICAL SERVICE AND ACCESS POINTS.
12. CABINET DOORS: SHALL BE OF COMBINATION CORE PLYWOOD.
13. INSTALLATION SHALL COMPLY WITH W.I. CERTIFIED SEISMIC INSTALLATION PROGRAM.

3 CABINET SCHEDULE NOTES
NTS

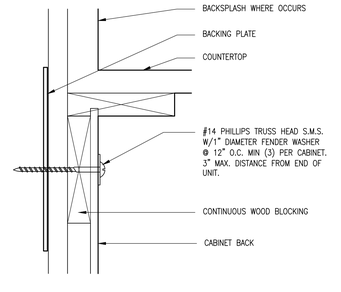

NOTE: PROVIDE CONCEALED ANCHORS @ ALL OPEN SHELVES, CABINETS, ETC.

10 BASE CABINET ANCHORAGE
6" = 1'-0"

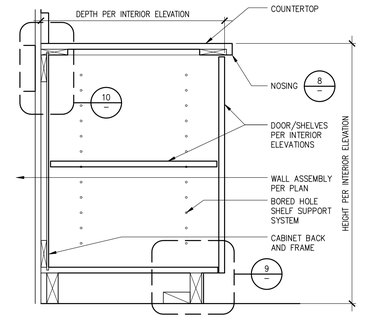

6 BASE CABINET
1-1/2" = 1'-0"

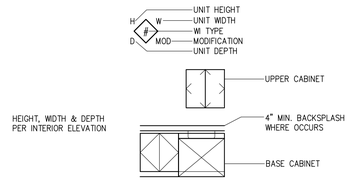

CASEWORK ELEVATIONS PER INTERIOR ELEVATIONS

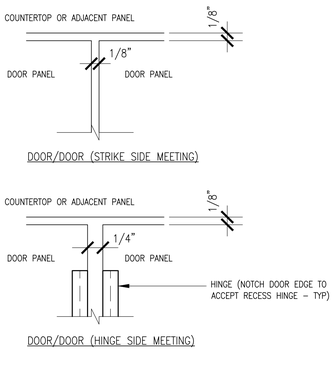

17 DOOR CLEARANCES
NTS

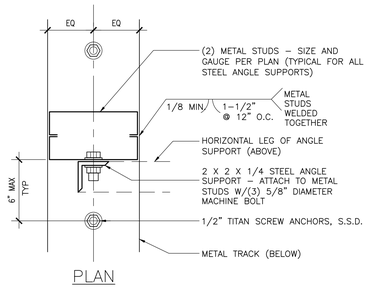

13 ANGLE SUPPORT
3" = 1'-0"

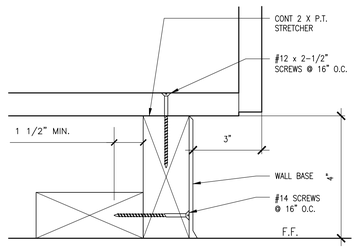

9 BASE CABINET ANCHORAGE
6" = 1'-0"

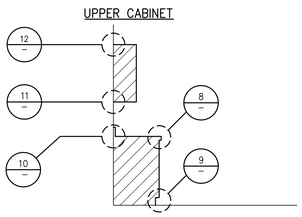

5 ATTACHMENT DETAILS
NTS

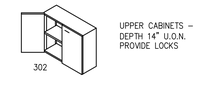

TALL STORAGE CABINETS – DEPTH 24" U.O.N. PROVIDE LOCKS

CASEWORK SHOWN ON THIS LEGEND ARE PARTIAL SAMPLE USED THROUGHOUT THIS PROJECT. REFER TO PLANS AND INTERIOR ELEVATIONS FOR APPLICABLE W.I. TYPES

1 CASEWORK LEGEND
NTS

SR
310 Nova Albion Way
San Rafael, CA 94903 415.492.3200

Terra Linda High School Modernization

310 Nova Albion Way
San Rafael, CA 94903
415.492.3200

Date	Issued For
1/17/2020	DSA Submittal

HED
417 Montgomery Street
Suite 400
San Francisco, California
94104 USA
(415) 981-2345
WWW.HED.DESIGN

© 2019

Casework Details

A-581

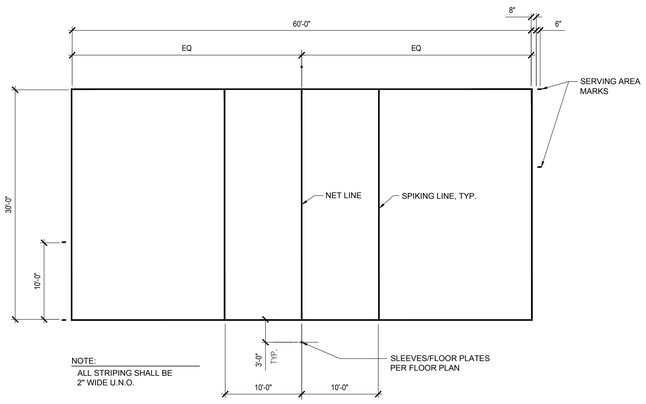

B. VOLLEYBALL COURT

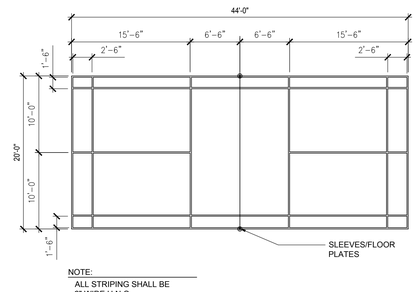

C. BADMINTON COURT

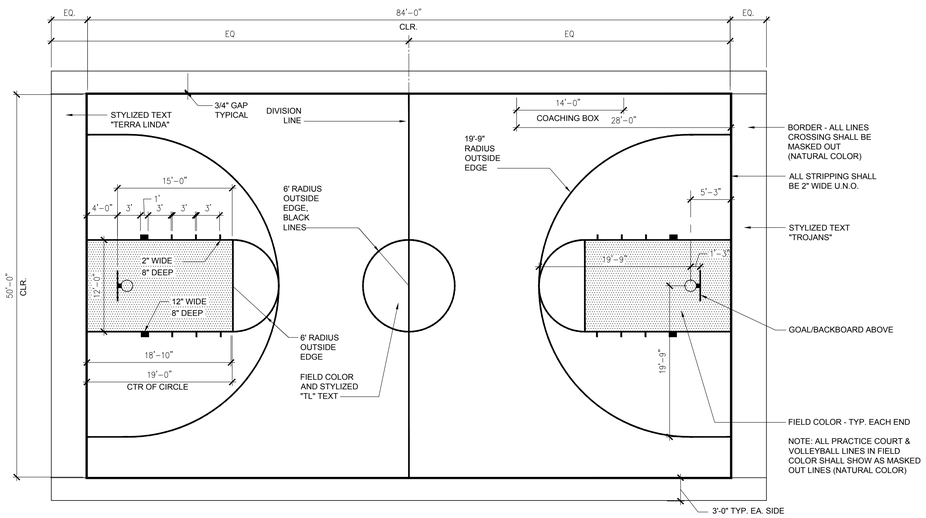

A. BASKETBALL COURT

9 COURT STRIPING PLANS
1/8" = 1'-0"

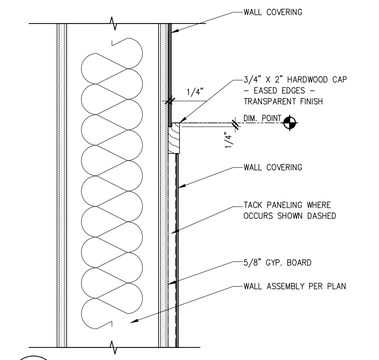

8 TYPICAL P-LAM. PANELING @ WOOD CAP
3" = 1'-0"

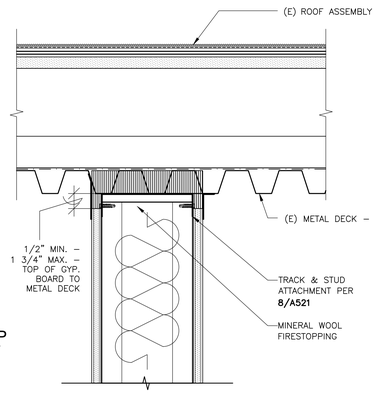

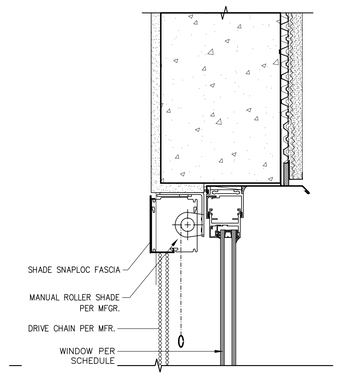

7 MANUAL SUNSHADE@EX WALL
SCALE

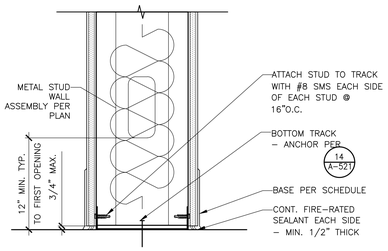

3 INT. WALL SECTION DETAIL
3" = 1'-0"

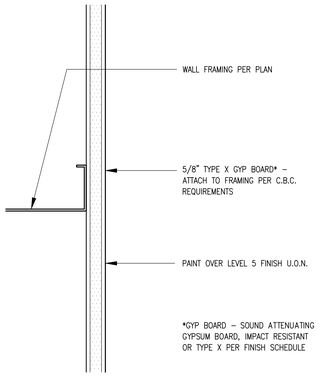

2 GYPSUM BOARD FINISH
6" = 1'-0"

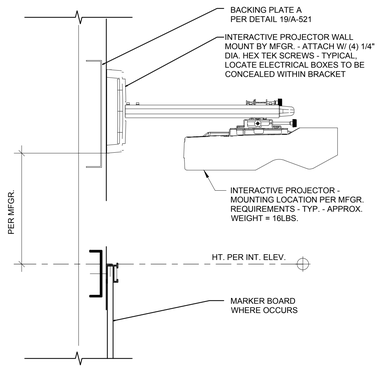

4 WALL MOUNTED PROJECTOR
1 1/2" = 1'-0"

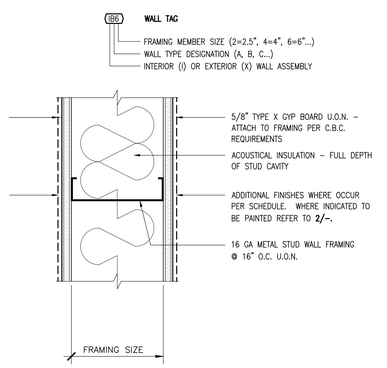

1 INTERIOR WALL ASSEMBLY - TYPE IB
3" = 1'-0"

INTERIOR WALLS

1. ALL INTERIOR FINISHES TO MEET THE FOLLOWING MINIMUM FIRE RESISTIVE REQUIREMENTS:

   FLAME SPREAD DEVELOPED < 25
   SMOKE DEVELOPED < 50

2. ALL PENETRATIONS THROUGH FIRE RATED ASSEMBLIES SHALL BE FIRE CAULKED AS DETAILED OR AS LISTED IN SPECIFICATIONS

METAL STUD FRAMING NOTES

1. SEE SHEETS A-521 AND A-522 FOR TYPICAL REQUIRED METAL STUD FRAMING & NOTES

INSULATION NOTES

1. ALL TYPES TO CONFORM TO UL LISTED DESIGNS – SEE SPECIFICATIONS

SR
310 Nova Albion Way
San Rafael, CA 94903 415.492.3200

Terra Linda High School Modernization

310 Nova Albion Way
San Rafael, CA 94903
415.492.3200

Date	Issued For
1/17/2020	DSA Submittal
4/13/2020	BID SET #1

HED
417 Montgomery Street
Suite 400
San Francisco, California
94104 USA
(415) 981-2345
WWW.HED.DESIGN

© 2019

Miscellaneous Details

A-591

FINISH SCHEDULE

ROOM #	ROOM NAME	FLOOR MATL	FLOOR FIN	BASE MATL	BASE FIN	WALL NORTH MATL	WALL NORTH FIN	WALL EAST MATL	WALL EAST FIN	WALL SOUTH MATL	WALL SOUTH FIN	WALL WEST MATL	WALL WEST FIN	CEILING MATL	CEILING FIN	NOTES
	BUILDING A															
A58A	CLASSROOM	LINO	FF	RES	FF	TB/WC	FF/P	TB/WC	FF/P	TB/WC	FF/P	TB/WC	FF/P	ACT/GYP	FF/P	APPLY WALLCOVERING OVER TACKBOARD
A58B	CLASSROOM	LINO	FF	RES	FF	TB/WC	FF/P	TB/WC	FF/P	TB/WC	FF/P	TB/WC	FF/P	ACT/GYP	FF/P	APPLY WALLCOVERING OVER TACKBOARD
	GYM BUILDING															
K01	ENTRANCE	(E)	FF	RES	FF	(E)GYP	P	(E)GYP	P	(E)GYP	P	(E)GYP	P	ACT	FF	
K07	GYM	(E)	FF	RES	FF	(E)GYP	P	(E)GYP	P	(E)GYP	P	(E)GYP	P	(E) TECTUM	P	(E) FLOOR TO BE REFINISHED AND RESTRIPED

FINISHES NOTES

1. SEE FLOOR PLANS, REFLECTED CEILING PLANS AND INTERIOR ELEVATIONS FOR ADDITIONAL FINISH AND MATERIAL INFORMATION. THE FINISH SCHEDULE CALLS OUT MAJOR MATERIALS ONLY. CABINETS, MARKER BOARDS, AND TACK PANELING ARE NOT INDICATED IN FINISH SCHEDULE. SEE INTERIOR ELEVATIONS FOR THESE AND OTHER ITEMS NOT CALLED OUT IN THE FINISH SCHEDULE.

2. TRANSITION BETWEEN DISSIMILAR FLOORING MATERIALS SHALL OCCUR UNDER INTERVENING DOORS. SEE ALSO DETAIL 1/A-591 FOR FLOOR TRANSITION DETAILS.

3. INTERIOR PAINT FINISH – ALL PAINTED SURFACES TO RECEIVE SEMI-GLOSS FINISH UNLESS OTHERWISE NOTED.

4. ALL FLOOR FINISHES SHALL BE FIRM & SLIP RESISTANT IN ACCORDANCE WITH C.B.C. SECTION 11B-302/.

WINDOW SCHEDULE

TYPE	CURTAIN WALL FRAME TYPE	MATERIAL	FINISH	HEAD	JAMB	SILL	GLAZING TYPE	FIRE RATING	COMMENTS
SF1	EXT	ALUM	ANODIZED	4/A-562	4/A-562	3/A-562	2		OPERABLE WINDOW, MANUAL ROLLER SHADE
SF2	EXT	ALUM	ANODIZED	4/A-562	4/A-562	1/A-561	2		
SF3	EXT	ALUM	ANODIZED	4/A-562	4/A-562	3/A-562	2		OPERABLE WINDOW, MANUAL ROLLER SHADE
SF4	EXT	ALUM	ANODIZED	4/A-562	4/A-562	3/A-562	2		OPERABLE WINDOW, MANUAL ROLLER SHADE
SF5	EXT	ALUM	ANODIZED	4/A-562	4/A-562	1/A-561	2		
SF6	EXT	ALUM	ANODIZED	4/A-562	4/A-562	1/A-562	2		
SF7	EXT	ALUM	ANODIZED	4/A-562	4/A-562	3/A-562	2		OPERABLE WINDOW, MANUAL ROLLER SHADE
SF8	EXT	ALUM	ANODIZED	12/A-562	13/A-562	10/A-562	2		OPERABLE & TRANSACTION WINDOW, MANUAL ROLLER SHADE
SF9	EXT	ALUM	ANODIZED	15/A-562	15/A-562	14/A-562	2		OPERABLE WINDOW, MANUAL ROLLER SHADE
SF10	EXT	ALUM	ANODIZED	4/A-562	4/A-562	1/A-562	2		
SF11	EXT	ALUM	ANODIZED	4/A-562	4/A-562	1/A-562	2		MANUAL ROLLER SHADE
SF12	EXT	ALUM	ANODIZED	4/A-562	4/A-562	1/A-562	2		
SF13	EXT	ALUM	ANODIZED	4/A-562	4/A-562	1/A-562	2		
SF14	EXT	ALUM	ANODIZED	4/A-562	9/A-562	1/A-562	2		
SF15	EXT	ALUM	ANODIZED	4/A-562	9/A-562	1/A-562	2		
SF16	EXT	ALUM	ANODIZED	4/A-562	4/A-562	1/A-562	2		MANUAL ROLLER SHADE
CW1	EXT	ALUM	ANODIZED	7/A-562	6/A-562	1/A-562	2, 3		
CW2	EXT	ALUM	ANODIZED	7/A-562	6/A-562	1/A-562	2, 3		
CW3	EXT	ALUM	ANODIZED	7/A-562	6/A-562	1/A-562	2, 3		
CW4	EXT	ALUM	ANODIZED	7/A-562	6/A-562	1/A-562	2, 3		
CW5	EXT	ALUM	ANODIZED	7/A-562	9/A-562	1/A-562	2		
CW6	EXT	ALUM	ANODIZED	7/A-562	9/A-562	1/A-562	2		
CW7	EXT	ALUM	ANODIZED	7/A-562	6/A-562	1/A-562	2, 3		
CW8	EXT	ALUM	ANODIZED	7/A-562	6/A-562	1/A-562	2, 3		
CW9	EXT	ALUM	ANODIZED	7/A-562	6/A-562	1/A-562	2, 3		
CW10	EXT	ALUM	ANODIZED	7/A-562	6/A-562	1/A-562	2, 3		

DOOR AND FRAME SCHEDULE

DOOR #	DOOR SIZE	DOOR THK	DOOR TYPE	DOOR MATL	DOOR FIN	DOOR INT/EXT	RATING MIN	HDWR GRP	HDWR PH	FRAME TYPE	FRAME MATL	FRAME FIN	DETAIL HEAD	DETAIL JAMB	DETAIL THRESHOLD	SIGNAGE PER (G-003)	EXIT SIGNAGE PER (G-003)	NOTES
1ST FLOOR																		
A10A	PAIR 4'0"X7'0"	1 3/4"	AA	AL	FF	EXT	–	03	Y	F2	AL	FF	7/A-561	9/A-561	1/A-561	2C	2A	INSTALL SECURE ACCESS PAD WITH ELECTRIFIED EXIT DEVICE
A14A	3'0"X7'0"	1 3/4"	A	AL	FF	EXT	–	01	Y	F2	AL	FF	7/A-561	8/A-561	1/A-561	2D	2A	
A14B	3'0"X7'0"	1 3/4"	A	AL	FF	EXT	–	01	Y	F2	AL	FF	7/A-561	8/A-561	1/A-561	2D	2A	
C100A	PAIR 3'0"X7'0"	1 3/4"	AA	AL	FF	EXT	–	03	Y	F2	AL	FF	7/A-561	8/A-561	1/A-561	2C	2A	INSTALL SECURE ACCESS PAD WITH ELECTRIFIED EXIT DEVICE
M300A	PAIR 3'0"X7'0"	1 3/4"	AA	AL	FF	EXT	–	03	Y	F2	AL	FF	7/A-561	8/A-561 9/A-561	1/A-561	2C	2A	INSTALL SECURE ACCESS PAD WITH ELECTRIFIED EXIT DEVICE
M300B	PAIR 3'0"X7'0"	1 3/4"	AA	AL	FF	EXT	–	03	Y	F2	AL	FF	7/A-561	8/A-561 9/A-561	1/A-561	–	–	
M300C	PAIR 3'0"X7'0"	1 3/4"	AA	AL	FF	EXT	–	03	Y	F2	AL	FF	7/A-561	9/A-561	1/A-561	2C	2A	
M300D	PAIR 3'0"X7'0"	1 3/4"	AA	AL	FF	EXT	–	03	Y	F2	AL	FF	7/A-561	8/A-561 9/A-561	1/A-561	–	–	
M300E	PAIR 3'0"X7'0"	1 3/4"	AA	AL	FF	EXT	–	03	Y	F2	AL	FF	7/A-561	8/A-561 9/A-561	1/A-561	2C	2A	INSTALL SECURE ACCESS PAD WITH ELECTRIFIED EXIT DEVICE
E1A	3'0"X7'0"	1 3/4"	A	AL	FF	EXT	–	01	Y	F2	AL	FF	7/A-561	8/A-561	1/A-561	2C	2A	
E1B	3'0"X7'0"	1 3/4"	(E) A	AL	FF	EXT	–	(E)	Y	(E) F2	AL	FF	(E) 7/A-561	(E) 8/A-561	(E) 1/A-561	2C	2A	REINSTALL (E) STOREFRONT DOOR IN NEW STOREFRONT OPENING. PROVIDE HARDWIRE CONNECTION TO (E) POWER OPERATOR.
E13A	PAIR 3'0"X7'0"	1 3/4"	(E) A	AL	FF	EXT	–	(E)	Y	(E) F2	AL	FF	(E) 7/A-561	(E) 8/A-561	(E) 1/A-561	2C	2A	INSTALL SECURE ACCESS PAD WITH ELECTRIFIED EXIT DEVICE
L100A	PAIR 3'0"X7'0"	1 3/4"	AA	AL	FF	EXT	–	03	Y	F2	AL	FF	7/A-561	8/A-561 9/A-561	1/A-561	–	–	INSTALL SECURE ACCESS PAD WITH ELECTRIFIED EXIT DEVICE
L100B	PAIR 3'0"X7'0"	1 3/4"	AA	AL	FF	EXT	–	03	Y	F2	AL	FF	7/A-561	8/A-561 9/A-561	1/A-561	2C	2A	
L100C	PAIR 3'0"X7'0"	1 3/4"	AA	AL	FF	EXT	–	03	Y	F2	AL	FF	7/A-561	9/A-561	1/A-561	2C	2A	
L100D	PAIR 3'0"X7'0"	1 3/4"	AA	AL	FF	EXT	–	03	Y	F2	AL	FF	7/A-561	8/A-561 9/A-561	1/A-561	–	–	INSTALL SECURE ACCESS PAD WITH ELECTRIFIED EXIT DEVICE
L100E	PAIR 3'0"X7'0"	1 3/4"	AA	AL	FF	EXT	–	03	Y	F2	AL	FF	7/A-561	8/A-561 9/A-561	1/A-561	2C	2A	
I13A	PAIR 3'0"X7'0"	1 3/4"	AA	AL	FF	EXT	–	03	Y	F2	AL	FF	7/A-561	8/A-561 9/A-561	1/A-561	2D	2A	INSTALL SECURE ACCESS PAD WITH ELECTRIFIED EXIT DEVICE
I27A	3'0"X7'0"	1 3/4"	A	AL	FF	EXT	–	01	Y	F2	AL	FF	7/A-561	9/A-561	1/A-561	2D	2A	
K01	PAIR 3'0"X7'0"	1 3/4"	(E) A	AL	FF	EXT	–	(E)	Y	(E) F2	AL	FF	(E) 7/A-561	(E) 8/A-561	(E) 1/A-561	2C	2A	INSTALL SECURE ACCESS PAD WITH ELECTRIFIED EXIT DEVICE
2ND FLOOR																		
M400A	3'0"X7'0"	1 3/4"	A	AL	FF	EXT	–	02	N	F2	AL	FF	7/A-561	9/A-561	1/A-561	2C	–	
L200A	3'0"X7'0"	1 3/4"	A	AL	FF	EXT	–	02	N	F2	AL	FF	7/A-561	9/A-561	1/A-561	2C	–	
A58B	3'0"X7'0"	1 3/4"	B	WD	P	INT	60	04	N	F1	HM	P	6/A-561	5/A-561	2/A-561	2D	2B	

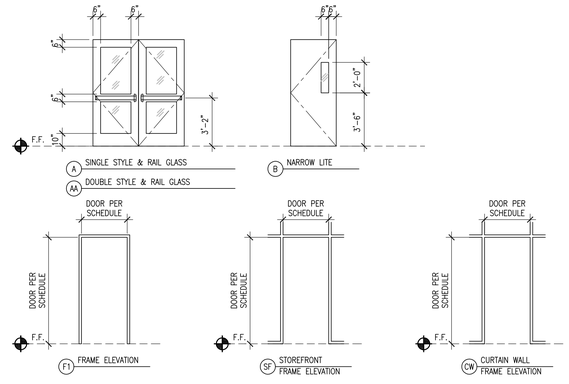

1 DOOR AND FRAME SCHEDULE
1/4" = 1'-0"

FINISH SCHEDULE MATERIAL LEGEND	
ACP	ACOUSTICAL CEILING PANEL
ACP2	BLACK ACOUSTICAL CEILING PANEL
ACP3	BLACK ACOUSTICAL BOARD
AL	ALUMINUM
AWP	ACOUSTICAL WALL PANELING
CONC	CONCRETE
CMU	CONCRETE MASONRY UNIT
CPT	CARPET
CT	CERAMIC TILE
EP	EPOXY FLOORING
ES	EXPOSED STRUCTURE
ETZ	EPOXY TERRAZZO FLOORING
EXT	EXTERIOR
FF	FACTORY FINISH
FIN	FINISH
FRP	FIBERGLASS REINFORCED PLASTIC PANELING
GL	GLASS
GYP	GYPSUM BOARD
HM	HOLLOW METAL
INT	INTERIOR
IRGB	IMPACT RESISTANT GYPSUM BOARD
LINO	LINOLEUM
MATL	MATERIAL
P	PAINT
PC	POLISHED CONCRETE
PLP	PLASTIC LAMINATE PANELING
PLY	PLYWOOD
RES	RUBBER BASE
SCW	SOLID CORE DOOR
SLR	CONCRETE SEALER
SS	STAINLESS STEEL
TB	TACKBORAD PANELING
TP	TRANSPARENT FINISH
VRB	VENTED RESILIENT RUBBER BASE
WC	WALLCOVERING
WD	WOOD
WDM	WOOD FLOORING SYSTEM WITH MASONITE

DOOR NOTES:

1. OVERALL DIMENSIONS SHOWN ARE NOMINAL DESIGN DIMENSIONS – SEE DETAILS AND FIELD VERIFY ROUGH OPENING DIMENSIONS TO DETERMINE OVERALL FABRICATION DIMENSIONS.
2. HOLLOW METAL FRAME FACE DIMENSION IS 2 INCHES U.O.N. SEE DETAILS FOR FRAME PROFILES.
3. ALL HOLLOW METAL FRAMES ARE FIELD PAINTED U.O.N.
4. CONNECT HOLLOW METAL FRAMES TO WALLS AS FOLLOWS:
   METAL STUDS: STEEL STUD ANCHORS @24" O.C. MAX. ALL AROUND AND 9" MAX. FROM ENDS. – (3) PER JAMB MIN. (1) ANCHOR @ HEAD MIDSPAN @ DOORS WIDER THAN 3'-0". (4) #8 X 3/4" FLAT HEAD SHEET METAL SCREWS PER ANCHOR TYPICAL.
   CONCRETE: 3/8" DIA. HILTI EXPANSION ANCHOR @ 24" O.C. MAX. – 6" FROM ENDS – (2) PER SIDE MIN.
5. ALL GLAZING IN DOORS AND ALL SIDELITE/TRANSOM GLAZING TO BE LAMINATED GLASS U.O.N.
6. ALL GLAZING IN FIRE RATED DOORS TO BE FIRE RESISTANT SAFETY GLASS U.O.N.
7. ALL DOORS ARE TO BE 1 3/4" THICK U.O.N.

DOOR SCHEDULE NOTES:

A. FOR DOOR HARDWARE (HDWR) REFER TO **SPECIFICATIONS.**

B. ALL EXTERIOR DOORS ARE TO OPEN 180 DEGREES DEPENDING ON THEIR LOCATION U.O.N.

C. PROVIDE BACKING @ ALL WALL MOUNTED DOOR STOP LOCATIONS.

D. ALL DOORS IN PATH OF TRAVEL SHALL:
- PROVIDE 32" OF CLEAR ACCESS
- BE PROVIDED W/ LEVER TYPE LOCKS & LATCHES
- BE OPERATED W/ A MAX. FORCE OF 5# INTERIOR AND 5# EXTERIOR
- HAVE MAX. THRESHOLD HEIGHT OF 1/2" IF BEVELED 1:2

DOOR SCHEDULE MATERIAL LEGEND	
AL	ALUMINUM
EXT	EXTERIOR
FF	FACTORY FINISH
FIN	FINISH
GL	GLASS
GRP	GROUP
HDWR	HARDWARE
HM	HOLLOW METAL
INT	INTERIOR
MATL	MATERIAL
P	PAINT
PH	PANIC HARDWARE
SCW	SOLID CORE DOOR
SS	STAINLESS STEEL
STL	STEEL
THK	THICKNESS
TP	TRANSPARENT FINISH

SLR
310 Nova Albion Way
San Rafael, CA 94903 415.492.3200

Terra Linda High School Modernization

310 Nova Albion Way
San Rafael, CA 94903
415.492.3200

Date	Issued For
1/17/2020	DSA Submittal
4/13/2020	BID SET #1

HED
417 Montgomery Street
Suite 400
San Francisco, California
94104 USA
(415) 981-2345
WWW.HED.DESIGN

© 2019

SCHEDULES

A-601

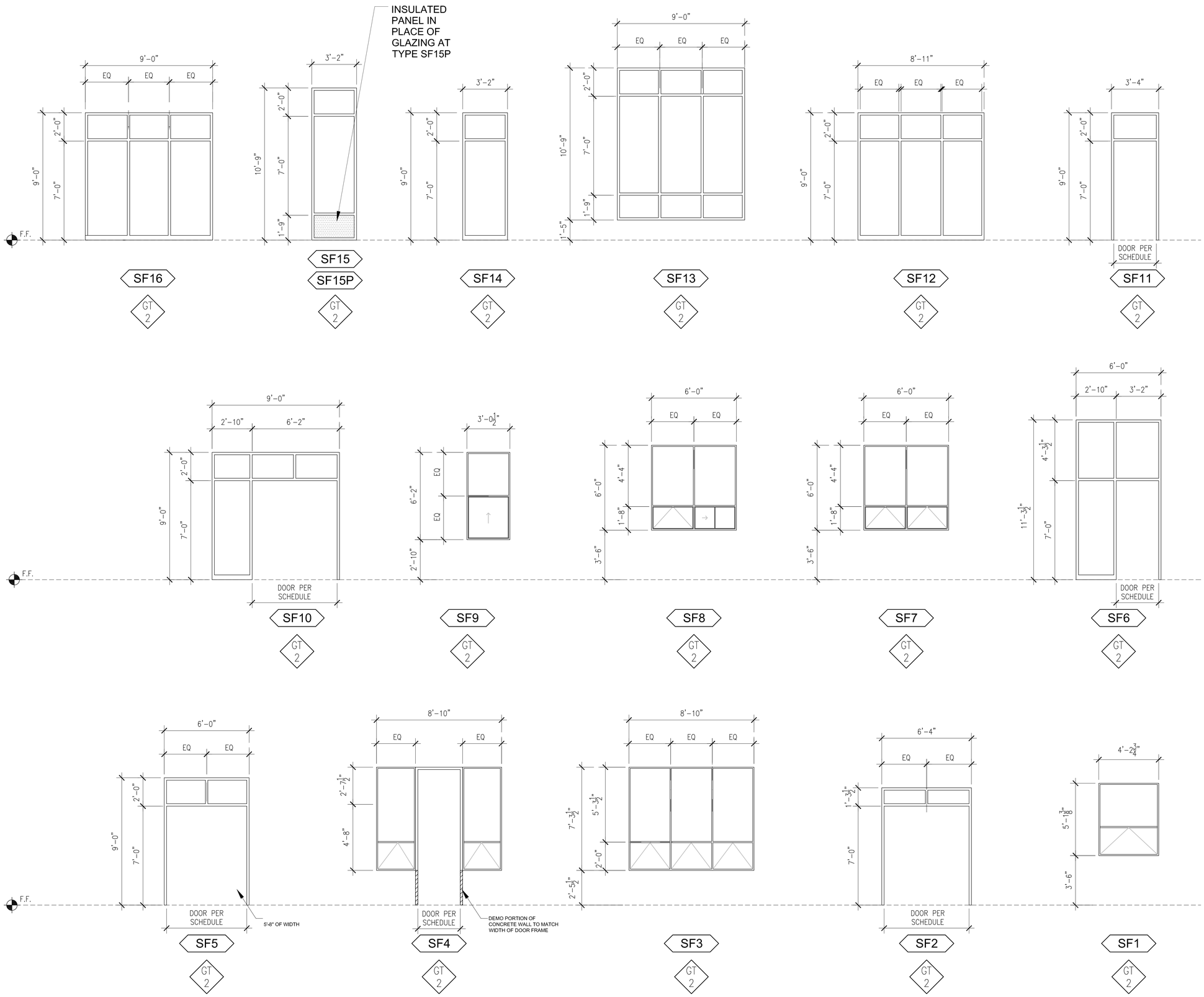

1 WINDOW TYPES
1/4" = 1'-0"

GENERAL NOTES:

1. OVERALL DIMENSIONS SHOWN ARE NOMINAL DESIGN DIMENSIONS. FIELD VERIFY ROUGH OPENING DIMENSIONS TO DETERMINE OVERALL FABRICATION

2. ALL HOLLOW METAL WINDOW GLAZING STOPS ARE TO BE INSTALLED AT THE INTERIOR OR MOST PRIVATE SIDE

3. WINDOW FLASHING SHALL BE SET IN A CONTINUOUS BED OF SEALANT

4. CONNECT WINDOWS AS FOLLOWS:

METAL: #12 x 2" STAINLESS STEEL SELF TAPPING SHEET METAL SCREWS @ 16" O.C. MAX. ALL AROUND & 6" FROM ENDS - 2 MIN. PER SIDE

CONCRETE MASONRY: 3/16" DIA. HILTI KWIK-CON II SCREWS @ 24" O.C. MAX. - 9" MAX. FROM ENDS WITH 1-1/4" MIN. EMBEDMENT (STAGGERED) PER ICBO #5259

5. WINDOW SILL PANS TO HAVE A REAR VERTICAL LEG WITH END DAMS - SEALED AT END TERMINATION. ALL SILL PANS TO BE FILLED WITH WATER AND TESTED TO BE WATER TIGHT PRIOR TO INSTALLATION

6. ALL PENETRATIONS THROUGH WINDOW SILL PANS SHALL BE SEALED WATERTIGHT

7. ALL ATTACHMENTS MUST ACCOMMODATE THERMAL AND DYNAMIC MOVEMENT

8. ALL INTERRUPTIONS IN FLASHINGS MUST BE SEALED

9. EXTERIOR AND INTERIOR WINDOW PERIMETER SEALANT SHALL BE CONTINUOUS AND IN THE SAME PLANE

10. CONNECT HOLLOW METAL FRAMES TO WALLS AS FOLLOWS:

11. ALL GLAZING IN DOORS AND ALL SIDELITE/TRANSOM GLAZING TO BE LAMINATED GLASS U.O.N.

12. OPERABLE WINDOWS TO BE PROVIDED WITH ACCESSIBLE CONTROLS WITH A MAXIMUM 5 LBS FORCE FOR OPERATION AND A 30"X48" CLEAR FLOOR SPACE.

GLAZING SCHEDULE	
GT 1	LAMINATED GLASS
GT 2	LOW-E COATED CLEAR INSULATING GLASS
GT 3	INSULATED METAL PANEL

SR
310 Nova Albion Way
San Rafael, CA 94903 415.492.3200

Terra Linda High School Modernization

310 Nova Albion Way
San Rafael, CA 94903
415.492.3200

Date	Issued For
1/17/2020	DSA Submittal
4/13/2020	BID SET #1

HED
417 Montgomery Street
Suite 400
San Francisco, California
94104 USA
(415) 981-2345
WWW.HED.DESIGN

© 2019

OPENING TYPES

A-602

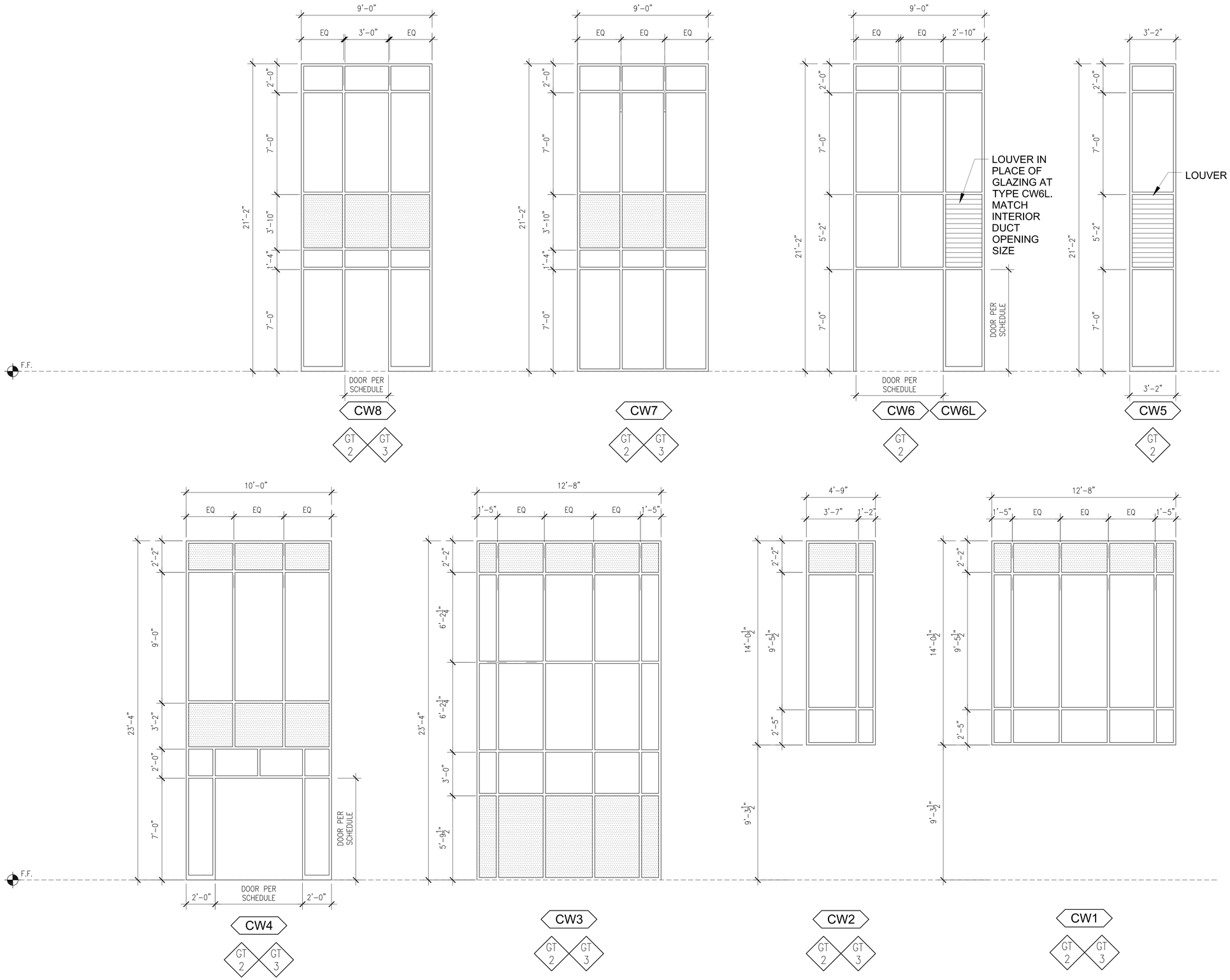

GLAZING SCHEDULE	
GT 1	LAMINATED GLASS
GT 2	LOW-E COATED CLEAR INSULATING GLASS
GT 3	INSULATED METAL PANEL

1 WINDOW TYPES
1/4" = 1'-0"

SR
310 Nova Albion Way
San Rafael, CA 94903 415.492.3200

Terra Linda High School Modernization

310 Nova Albion Way
San Rafael, CA 94903
415.492.3200

Date	Issued For
1/17/2020	DSA Submittal
4/13/2020	BID SET #1

HED
417 Montgomery Street
Suite 400
San Francisco, California
94104 USA
(415) 981-2345
WWW.HED.DESIGN

© 2019

OPENING TYPES

A-603

310 Nova Albion Way
San Rafael, CA 94903 415.492.3200

Terra Linda High School
Modernization

310 Nova Albion Way
San Rafael, CA 94903
415.492.3200

Date	Issued For
1/17/2020	DSA Submittal
4/13/2020	BID SET #1

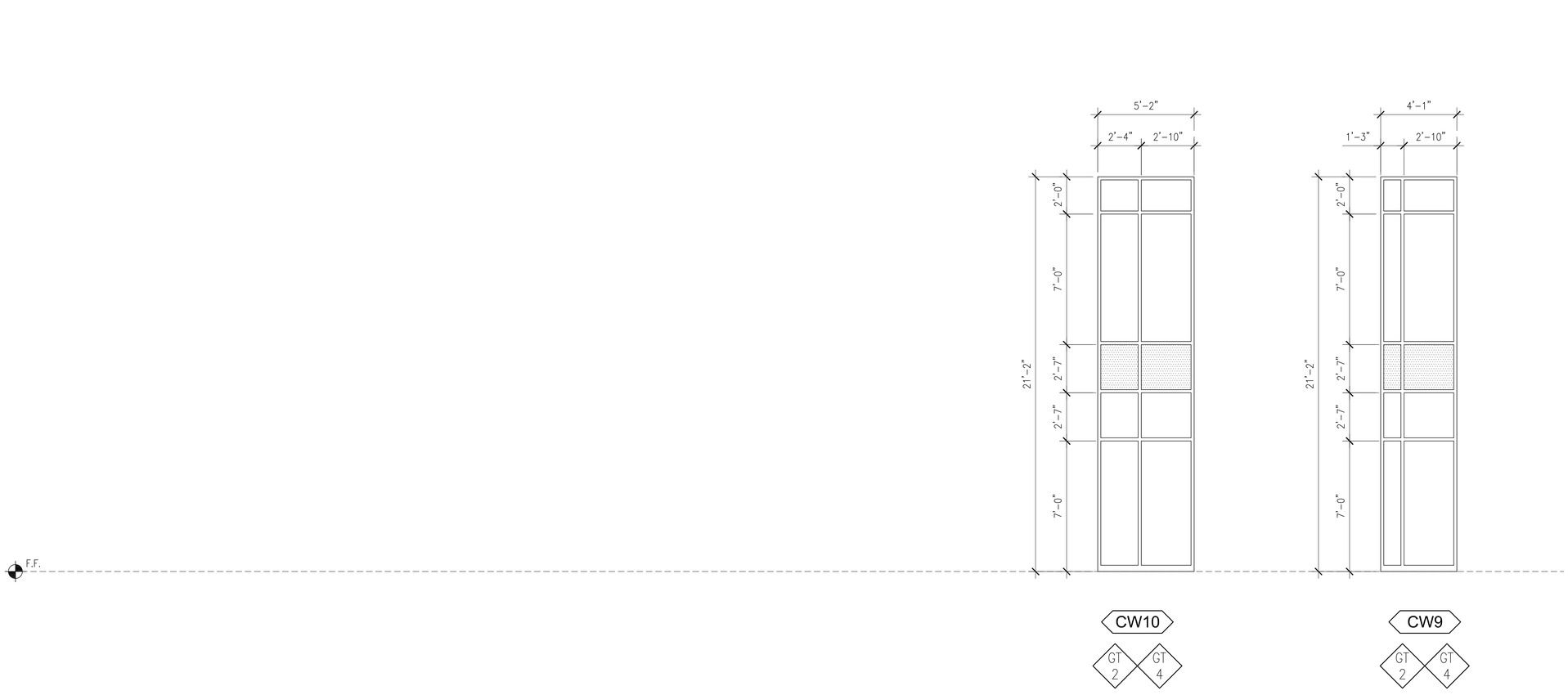

GLAZING SCHEDULE

- GT 1 — LAMINATED GLASS
- GT 2 — LOW-E COATED CLEAR INSULATING GLASS
- GT 3 — INSULATED METAL PANEL

1 WINDOW TYPES
1/4" = 1'-0"

HED
417 Montgomery Street
Suite 400
San Francisco, California
94104 USA

(415) 981-2345

WWW.HED.DESIGN

© 2019

OPENING TYPES

A-604

MECHANICAL NOTES & SPECIFICATIONS

1. THESE DRAWINGS AND NOTES SHALL BE READ IN CONJUNCTION WITH AND BE CONSIDERED TO BE PART OF A SEPARATE AND COMPLETE MECHANICAL SPECIFICATION.

2. ENTIRE INSTALLATION SHALL CONFORM TO THE REQUIREMENTS OF ALL APPLICABLE CODES AND REGULATIONS, INCLUDING:

   2.1. 2019 CALIFORNIA BUILDING CODE
   2.2. 2019 CALIFORNIA PLUMBING CODE
   2.3. 2019 CALIFORNIA ELECTRICAL CODE
   2.4. 2019 CALIFORNIA MECHANICAL CODE
   2.5. 2019 CALIFORNIA GREEN BUILDING STANDARD
   2.6. 2019 CALIFORNIA ENERGY CODE
   2.7. 2019 CALIFORNIA FIRE CODE

3. OBTAIN AND PAY FOR ALL REQUIRED FEES, PERMITS AND INSPECTIONS.

4. COORDINATE ENTIRE INSTALLATION OF THE HVAC SYSTEM(S) WITH THE WORK OF ALL OTHER TRADES PRIOR TO ANY FABRICATION OR INSTALLATION. PROVIDE ALL FITTINGS, OFFSETS, AND TRANSITIONS FOR A COMPLETE AND WORKABLE INSTALLATION. COORDINATE ITEMS TO BE PROVIDED BY OTHER TRADES WHERE MENTIONED IN THE CONTRACT DOCUMENTS PRIOR TO BID - NO EXCEPTIONS. PROVIDE A COMPLETE WORKING SYSTEM PER CONTRACT DOCUMENTS.

5. COORDINATE ALL WORK WITH THE ARCHITECTURAL, STRUCTURAL DRAWINGS AND DRAWINGS OF OTHER TRADES. INSTALL ALL WORK TO CLEAR NEW AND EXISTING ARCHITECTURAL WORK, STRUCTURAL MEMBERS AND WORK OF OTHER TRADES. NO ITEM SUCH AS PIPE, DUCT, ETC. SHALL BE IN CONTACT WITH ANY EQUIPMENT. ANY ERRORS, OMISSIONS, DISCREPANCIES, DEFICIENCIES, OR CONFLICTS SHALL BE BROUGHT TO THE ATTENTION OF THE GENERAL CONTRACTOR, THE ARCHITECT AND THE ENGINEER PRIOR TO PROCEEDING WITH ANY AFFECTED WORK.

6. FIELD VERIFY EXACT SIZE AND LOCATION OF EXISTING EQUIPMENT, DUCTWORK, AND REGISTERS PRIOR TO INSTALLATION OF ANY NEW EQUIPMENT, DUCTWORK OR REGISTERS. IF THE EXISTING DUCTWORK SIZE IS SMALLER THAN THE NEW DUCTWORK SIZE, AND/OR THE EXISTING DUCTWORK IS NOT IN THE NOTED LOCATION, NOTIFY OWNER IMMEDIATELY AND NO NEW DUCTWORK IS TO BE INSTALLED UNTIL THE ISSUE IS RESOLVED.

7. COORDINATE THE LOCATION OF ALL ROOF OPENINGS AND THE LOCATION OF ALL ROOF MOUNTED EQUIPMENT WITH THE STRUCTURAL AND ARCHITECTURAL PLANS PRIOR TO ANY FABRICATION AND INSTALLATION.

8. PLATFORMS, CURBS, AND FLASHING FOR MECHANICAL EQUIPMENT IS INDICATED ON THE STRUCTURAL AND ARCHITECTURAL PLANS, UNLESS NOTED OTHERWISE. WHERE THERE IS A CONFLICT WITH THE MECHANICAL PLANS, NOTIFY THE ARCHITECT AND ENGINEER PRIOR TO FABRICATION AND INSTALLATION.

9. COORDINATE THE LOCATIONS OF ALL CEILING DIFFUSERS, REGISTERS, AND GRILLES WITH THE ARCHITECTURAL REFLECTED CEILING PLAN, ELECTRICAL LIGHTING LAYOUT, FIRE SPRINKLER SYSTEM, AND ARCHITECTURAL ROOM ELEVATIONS. THE ARCHITECT AND ENGINEER SHALL BE IMMEDIATELY NOTIFIED OF ANY CONFLICTS PRIOR TO FABRICATION AND INSTALLATION.

10. EQUIPMENT, DUCTS, PIPING, AND OTHER DEVICES AND MATERIALS INSTALLED OUTSIDE OF THE BUILDING OR OTHERWISE EXPOSED TO THE WEATHER SHALL BE COMPLETELY WEATHER PROOFED AND PAINTED TO MATCH. COORDINATE WITH ARCHITECT PRIOR TO PAINTING.

11. VERIFY ALL CLEARANCES AND AVAILABLE SPACE FOR DUCTWORK PRIOR TO ORDERING AND/OR FABRICATION.

12. DIMENSIONS SHOWN ON THESE PLANS ARE APPROXIMATE AND MUST BE CONFIRMED ON SITE AND/OR PER ARCHITECTURAL DRAWINGS. ANY SCALE NOTATIONS ARE TO BE VERIFIED PRIOR TO ANY TAKE-OFF.

13. PRIOR TO OCCUPANCY THE ENTIRE HVAC SYSTEMS SHALL BE BALANCED BY AN INDEPENDENT AIR BALANCE CONTRACTOR FOR AIR IN ACCORDANCE AND PROCEDURES WITH (AABC) ASSOCIATED AIR BALANCE COUNCIL STANDARDS, (NEBB) NATIONAL ENVIRONMENTAL BALANCING BUREAU , OR (TABB) TESTING ADJUSTING AND BALANCING BUREAU. SYSTEMS SHALL BE BALANCED AS INDICATED ON PLANS INCLUDING OUTSIDE AIR VENTILATION. FINAL BALANCING SHALL BE WITHIN 10% FOR SUPPLY, RETURN AND OUTSIDE AIR QUANTITIES INDICATED. WHERE THERE IS A CONFLICT IN PLANS, NOTIFY THE ENGINEER PRIOR TO BALANCING OF SYSTEM. IF NOT DONE SO THE ENTIRE SYSTEM MUST BE RE-BALANCED DUE TO CONFLICTS ON CONTRACT DOCUMENTS. PROVIDE A COPY OF THE AIR BALANCE REPORT TO THE ENGINEER FOR REVIEW. PROVIDE PROCEDURES AND REPORTING PER CAL GREEN CODES SECTION 5.410.4.3, SECTION 5.410.4.3.1 AND SECTION 5.410.4.4.

14. CONTROLS CONTRACTOR AND AIR BALANCE CONTRACTOR TO COORDINATE WORK AND PERFORM NECESSARY TASKS TO OBTAIN AIR FLOW QUANTITIES FOR SYSTEMS SHOWN HEREIN.

15. PROVIDE TO BUILDING OWNER, PER CAL GREEN CODE SECTION 5.410.4.5, AND CMC 514.0, OPERATING PROCEDURES FOR THE USE, INSPECTION, TESTING, AND MAINTENANCE OF EQUIPMENT MANUAL INCLUDING INSPECTION AND REPORTS.

16. PROVIDE OPERATING PROCEDURES FOR COOKING EQUIPMENT PER CMC SECTION 514.1.

17. EQUIPMENT, ACCESSORIES AND RELATED PIPING SHALL BE INSTALLED IN STRICT ACCORDANCE WITH THE EQUIPMENT MANUFACTURER'S RECOMMENDATIONS. PROVIDE ALL FITTINGS, TRANSITIONS, DAMPERS, VALVES, AND OTHER DEVICES REQUIRED FOR A COMPLETE WORKABLE INSTALLATION.

18. PROVIDE MANUAL VOLUME DAMPERS AND BACKDRAFT DAMPERS FOR OUTSIDE AIR INTAKES ON ALL AIR HANDLING EQUIPMENT AND EXHAUST FANS SERVING CONDITIONED SPACES. EXCEPTION: EQUIPMENT WITH FACTORY AIR ECONOMIZERS.

19. OUTSIDE AIR INTAKES SHALL MEET AS A MINIMUM CODE REQUIRED CLEARANCES FROM EXHAUST, FLUE, FUEL BURNING APPLIANCES AND PLUMBING VENT OUTLETS. FOR GAS/ELECTRIC AIR CONDITIONING UNITS WHERE THE CODE REQUIRED CLEARANCES ARE NOT MET, A FACTORY FLUE GAS DEFLECTOR AND EXTENSION SHALL BE USED TO MINIMIZE THESE CLEARANCES.

20. ALL HVAC EQUIPMENT SERVING NORMALLY OCCUPIED SPACES SHALL HAVE MINIMUM MERV11 FILTERS UNLESS OTHERWISE NOTED.

21. AIR FILTERS SHALL BE STATE FIRE MARSHALL APPROVED AND LISTED, PREFORMED FILTERS HAVING COMBUSTIBLE FRAMING SHALL BE TESTED AS A COMPLETE ASSEMBLY. INSTALLED FILTERS SHALL BE CLEARLY LABELED BY THE MANUFACTURE INDICATING THE MERV RATING, AND THE FILTER SPECIFICATION SHALL BE INCLUDED IN THE OPERATION AND MAINTENANCE MANUAL. AIR FILTERS SHALL BE ACCESSIBLE FOR CLEANING OR REPLACEMENT.

22. EQUIPMENT WITH MOVING PARTS, FIXED OR FLEXIBLY MOUNTED, SHALL BE PROVIDED WITH FLEXIBLE DUCT AND PIPE CONNECTIONS AND SHALL BE BRACED OR ANCHORED.

23. HVAC EQUIPMENT SHALL BE CERTIFIED BY THE CALIFORNIA ENERGY COMMISSION TO COMPLY WITH THE LATEST EFFICIENCY STANDARDS.

24. AC UNITS PROVIDED WITH ECONOMIZER CYCLE DAMPERS SHALL HAVE DAMPERS SET UP TO CLOSE AUTOMATICALLY ON FAN SHUTDOWN. DAMPERS SHALL NOT USE LINKAGE ARRANGEMENT BUT RATHER DIRECT DRIVE ACTUATORS.

25. AIR HANDLING EQUIPMENT SERVING CONDITIONED SPACES SHALL PROVIDE CONTINUOUS OUTSIDE AIR TO SPACES IN OCCUPIED MODE. CONTROLS SHALL BE PROVIDED TO PROVIDE THE MINIMUM RATE OF OUTDOOR AIR REQUIRED BY THE STATE ENERGY REGULATIONS.

26. CONTRACTOR TO SUBMIT ALL EQUIPMENT, DUCTWORK, AIR DISTRIBUTION DEVICES, AND OTHER ACCESSORIES TO THE ENGINEER FOR APPROVAL PRIOR TO ANY ORDERING OF SUCH ITEMS.

27. DUCTWORK, PIPING, CONDUIT, ETC. PENETRATING FIRE RATED CONSTRUCTION SHALL HAVE APPROVED FIRE STOPPING.

28. CONTROL SCHEMATICS ARE FOR REFERENCE ONLY. REFER TO ELECTRICAL DRAWINGS AND SPECIFICATIONS FOR ELECTRICAL DEVICES REQUIRED AND SEQUENCE OF OPERATION.

29. WHERE THE CONTROLS CONTRACTOR IS RETAINED BY THE OWNER THEY SHALL BE RESPONSIBLE TO FURNISH AND INSTALL ALL DEVICES, WIRING, AND TERMINATIONS REQUIRED FOR A COMPLETE AND FUNCTIONAL INSTALLATION. COORDINATE ALL WORK AND REQUIREMENTS WITH OTHER TRADES INCLUDING THE GENERAL, MECHANICAL, AND ELECTRICAL CONTRACTORS PRIOR TO BID. FOLLOW ALL SUBMITTAL REQUIREMENTS PER DRAWINGS AND SPECIFICATIONS.

30. LINE VOLTAGE WIRING SHALL BE INSTALLED IN CONDUIT. ALL LINE VOLTAGE CONDUIT AND WIRING, INCLUDING FINAL CONNECTIONS, SHALL BE FURNISHED AND INSTALLED BY THE ELECTRICAL CONTRACTOR AS INDICATED ON THE ELECTRICAL DRAWINGS OR SPECIFIED IN THE ELECTRICAL SECTION OF THE SPECIFICATIONS. ALL ELECTRICAL WORK SHALL BE INSTALLED IN ACCORDANCE WITH ALL CODES AND REGULATIONS OF GOVERNING BODIES HAVING JURISDICTION THEREOF.

31. LOW VOLTAGE CONDUIT AND WIRING AS APPLICABLE, INCLUDING FINAL CONNECTIONS, SHALL BE FURNISHED AND INSTALLED BY THE MECHANICAL CONTRACTOR AS INDICATED ON THE MECHANICAL DRAWINGS OR SPECIFIED IN THE MECHANICAL SECTION OF THE SPECIFICATIONS.

32. LOW VOLTAGE WIRING SHALL BE IN CONDUIT WITHIN CONCEALED WALLS AND WHERE EXPOSED.

33. CONTROL WIRING INSTALLED IN EXISTING BUILDINGS WHERE WIRING CANNOT BE FED DOWN THROUGH EXISTING WALLS SHALL BE INSTALLED IN WIREMOLD (PVC).

34. THERMOSTATS SHALL HAVE LOCKABLE COVERS (WHERE INDICATED ON PLANS) AND SHALL BE OF THE ELECTRONIC, PROGRAMMABLE, AUTOMATIC CHANGEOVER TYPE TO SEQUENCE HEATING OR COOLING. SET POINT RANGE SHALL BE 10F° BETWEEN FULL HEATING AND COOLING. THEY SHALL HAVE CAPABILITY OF TERMINATING ALL HEATING AT A TEMPERATURE NO MORE THAN 70°F, AND COOLING AT A TEMPERATURE NOT LESS 78°F. ADJUSTABLE TEMPERATURE DIFFERENTIAL SHALL BE $1\frac{1}{2}$F°. CONTROL LIMITS SHALL BE FROM 55°F TO 85°F. MOUNT TOP OF BOX AT NO MORE THAN 42 INCHES ABOVE FLOOR TO MEET LOCAL ADA REQUIREMENT. IN ADDITION, THERMOSTAT(S) SHALL HAVE THE CAPABILITY TO CONNECT AND RESPOND TO A OCCUPANT CONTROLLED DEMAND RESPONSE SIGNAL OR PRICE SIGNAL FOR RESETTING OF ROOM SETPOINTS.

35. THERMOSTATS THAT ARE PART OF AN ENERGY MANAGEMENT SYSTEM SHALL FOLLOW CONTROL SPECIFICATIONS AND DRAWING REQUIREMENTS.

36. RELOCATE (E) THERMOSTAT THAT DO NOT MEET THE ADA HEIGHT REQUIREMENTS DUE TO OBSTRUCTIONS, NOTIFY THE ENGINEER AND ARCHITECT BEFORE PROCEEDING.

37. DUCTWORK CONSTRUCTION SHALL BE INSTALLED, SEALED AND INSULATED TO MEET THE REQUIREMENTS OF CMC SECTIONS 601.0, 602.0, 603.0, 604.0, 605.0, AND ANSI /SMACNA-006 2006 HVAC DUCT CONSTRUCTION STANDARDS METAL AND FLEXIBLE 3RD EDITION.

38. AT THE TIME OF ROUGH INSPECTION AND DURING STORAGE ON THE CONSTRUCTION SITE AND UNTIL FINAL STARTUP OF THE HEATING, COOLING AND VENTILATING EQUIPMENT, ALL DUCT AND OTHER RELATED AIR DISTRIBUTION COMPONENTS, OPENINGS SHALL BE COVERED WITH TAPE, PLASTIC, SHEET METAL OR OTHER METHODS TO REDUCE THE AMOUNT OF DEBRIS WHICH MAY COLLECT IN THE SYSTEM. PROVIDE POLLUTANT CONTROL PER CAL GREEN 2019 CODES SECTION 5.504.1-3 FOR TEMPORARY VENTILATION, COVERING OF DUCT OPENINGS AND PROTECTION OF MECHANICAL EQUIPMENT DURING CONSTRUCTION, AND USE OF LOW VOC SEALANTS

39. ALL SUPPLY, RETURN AND EXHAUST DUCT JOINTS SHALL BE SEALED PER CALIFORNIA MECHANICAL CODE CHAPTER 6 REQUIREMENTS. SEAL CLASS B.

40. DUCTWORK CONSTRUCTION SHALL MEET THE FOLLOWING SYSTEM PRESSURE REQUIREMENTS:
    40.1. ALL OTHER DUCTWORK - 2 INCH WATER COLUMN

41. NEW RECTANGULAR DUCTWORK SHALL BE SHEET METAL CONSTRUCTED OR SPIRAL ROUND, ERECTED, AND TESTED IN ACCORDANCE WITH THE MOST RESTRICTIVE OF LOCAL REGULATIONS, PROCEDURES DETAILED IN THE ASHRAE HANDBOOK OF FUNDAMENTALS, CHAPTER 6 OF THE CALIFORNIA MECHANICAL CODES, OR THE APPLICABLE STANDARDS ADOPTED BY (SMACNA) SHEET METAL AND AIR CONDITIONING CONTRACTORS NATIONAL ASSOCIATION: SMACNA HVAC DUCT CONSTRUCTION STANDARDS -METAL OR FLEXIBLE, UL181 CERTIFIED.

42. ALL FLEXIBLE DUCT SHALL NOT EXCEED FIVE FEET IN LENGTH TO RESPECTIVE DIFFUSERS, GRILLES, OR OTHER AIR DEVICES. FLEX DUCT SHALL NOT BE USED IN LIEU OF RIGID ELBOWS OR FITTINGS PER CMC SEC.603.4.1.

43. LIMIT USE OF PERMANENT HVAC SYSTEMS DURING CONSTRUCTION TO CONDITIONING NECESSARY FOR MATERIAL AND EQUIPMENT INSTALLATION. IF PERMANENT HVAC IS USED DURING CONSTRUCTION, INSTALL MERV-8 FILTERS ON RETURNS, AND REPLACE ALL FILTERS IMMEDIATELY PRIOR TO OCCUPANCY, OR ,IF THE BUILDING IS OCCUPIED DURING ALTERATION, AT THE CONCLUSION OF CONSTRUCTION.

44. PROVIDE SEISMIC RESTRAINTS TO ALL DUCTWORK, PIPE, AND EQUIPMENT SUPPORTS IN ACCORDANCE WITH THE LATEST SMACNA GUIDELINES FOR SEISMIC RESTRAINT OF MECHANICAL SYSTEMS. SUSPENDED EQUIPMENT SHALL BE PROVIDED WITH SEISMIC ANCHORAGE AND ISOLATION SUPPORTS.

45. WHERE ANCHORAGE DETAILS ARE NOT SHOWN ON THE DRAWINGS THE FIELD INSTALLATION SHALL BE SUBJECT TO THE APPROVAL OF THE STRUCTURAL ENGINEER OR THE FIELD REPRESENTATIVE OF THE DIVISION OF THE STATE ARCHITECT.

46. RECTANGULAR DUCT TURNS IN SUPPLY, RETURN, AND EXHAUST DUCTS SHALL HAVE TURNING VANES UNLESS OTHERWISE NOTED, OR SHALL HAVE A INNER RADIUS TURN OF NO LESS THAN THE WIDTH OF THE DUCT.

47. DUCTWORK HANDLING CONDITIONED AIR SHALL BE INSULATED OR LINED. INTERIOR DUCTWORK SHALL BE INSULATED WITH A NON-FIBROUS MATERIAL, R=4.2. ALL SUPPLY AND RETURN DUCTWORK EXPOSED TO WEATHER SHALL BE INTERNALLY LINED WITH 2" THICK DUCT LINER UNLESS OTHERWISE INDICATED OR SPECIFIED. ALL DUCT SIZES INDICATED ON PLANS ARE NET INSIDE DIMENSIONS. ALL INSULATION SHALL HAVE A FLAME SPREAD OF NOT MORE THAN 25 AND A SMOKE DENSITY NOT EXCEEDING 50. ALL DUCT INSULATION SHALL COMPLY WITH TABLE 4-16, 2019 CALIFORNIA NONRESIDENTIAL MANUAL.

48. MANUAL VOLUME DAMPERS SHALL BE PROVIDED IN ALL DUCT BRANCHES TO INDIVIDUAL DIFFUSERS, GRILLES, AND REGISTERS, AS WELL AS OUTSIDE AIR INTAKE DUCTS. DAMPERS SHALL BE LOCATED AT THE BRANCH DUCT LOCATIONS. COORDINATE LOCATIONS OF DAMPERS WITH THE AIR BALANCING CONTRACTOR PRIOR TO BID, SO AS TO ENSURE ACCESSIBILITY AFTER INSTALLATION. IN LOCATIONS WHERE THESE DAMPERS ARE INACCESSIBLE, CABLE OPERATED ADJUSTMENT CONTROLS SHALL BE PROVIDED AT NO ADDITIONAL COST. OPPOSED BLADE DAMPERS SHALL NOT BE PERMITTED UNLESS OTHERWISE NOTED.

49. REMOVE ALL LEFT OVER DUCTWORK SCRAPS, ETC. (IF ANY) AND LEAVE PREMISES CLEAN AND FREE OF ANY TRASH OR DEBRIS DUE TO THEIR WORK.

SUBSTITUTION OF MATERIALS

1. EQUALS: THE DESIGN HAS BEEN BASED ON THE MANUFACTURER'S NAME AND PRODUCT LISTED ON THE DRAWINGS. OTHER MANUFACTURER'S NAMES LISTED IN THE SPECIFICATIONS MAY BE SELECTED AND CONSIDERED 'AS EQUAL' FOR QUALITY ONLY, HOWEVER, THEY MUST MATCH THE PERFORMANCE, CONSTRUCTION, FIT AND FEATURES OF THOSE SELECTED FOR DESIGN. THE ACCEPTANCE OF THESE DOES NO RELIEVE THE CONTRACTOR OF RESPONSIBILITY FOR PROVIDING THE REQUIRED MATERIALS AND PROVIDING A WORKABLE SYSTEM. THOSE ITEMS NOTED AS 'NO SUBSTITUTIONS' SHALL BE FURNISHED WHEN SPECIFIED.

2. TO SUBSTITUTE EQUIPMENT OR MATERIAL OTHER THAN THOSE CONSIDERED FOR THE BASIS OF DESIGN, SUBMIT INFORMATION AS CALLED FOR IN THE 'REQUEST FOR SUBSTITUTION' SPECIFICATIONS, AND SUBMIT REQUIRED INFORMATION FOR BOTH THE SPECIFIED OR SCHEDULED ITEM AND THE SUBSTITUTE ITEM. THESE SUBMITTALS MUST SHOW THAT BOTH THE SPECIFIED AND THE SUBSTITUTE MATERIAL MATCH IN QUALITY, PERFORMANCE, CONSTRUCTION, FIT AND FEATURES OF THOSE SELECTED FOR DESIGN. ANY EQUIPMENT OR MATERIAL SUBMITTED FOR SUBSTITUTION WITHOUT THE COMPARISON INFORMATION WILL NOT BE REVIEWED OR ACCEPTABLE.

3. LIABILITY OF SUBSTITUTIONS: PERFORMANCE OF SUBSTITUTIONS MUST BE EQUAL TO THE ITEM SPECIFIED. SHOULD THE SUBSTITUTED ITEM FAIL TO PERFORM ACCORDING TO SPECIFICATIONS, REPLACE WITH THE ORIGINALLY SPECIFIED ITEM WITHOUT EXTRA COMPENSATION ON REQUEST OF THE ARCHITECT ANY TIME WITHIN THE GUARANTEE PERIOD.

M/E/P COMPONENT ANCHORAGE NOTES

ALL MECHANICAL, PLUMBING, AND ELECTRICAL COMPONENTS SHALL BE ANCHORED AND INSTALLED PER THE DETAILS ON THE DSA APPROVED CONSTRUCTION DOCUMENTS. WHERE NO DETAIL IS INDICATED, THE FOLLOWING COMPONENTS SHALL BE ANCHORED OR BRACED TO MEET THE FORCE AND DISPLACEMENT REQUIREMENTS PRESCRIBED IN 2019 CBC, SECTIONS 1616A.1.18 THROUGH 1616A.1.26 AND ASCE 7-10 CHAPTER 13, 26 AND 30.

1. ALL PERMANENT EQUIPMENT AND COMPONENTS
2. TEMPORARY OR MOVABLE EQUIPMENT THAT IS PERMANENTLY ATTACHED (E.G. HARD WIRED) TO THE BUILDING UTILITY SERVICES SUCH AS ELECTRICITY, GAS OR WATER.
3. MOVABLE EQUIPMENT WHICH IS STATIONED IN ONE PLACE FOR MORE THAN 8 HOURS AND HEAVIER THAN 400 POUNDS OR HAS A CENTER OF MASS LOCATED 4 FEET OR MORE ABOVE THE ADJACENT FLOOR OR ROOF LEVEL THAT DIRECTLY SUPPORT THE COMPONENT ARE REQUIRED TO BE ANCHORED WITH TEMPORARY ATTACHMENTS.

THE FOLLOWING MECHANICAL AND ELECTRICAL COMPONENTS SHALL BE POSITIVELY ATTACHED TO THE STRUCTURE, BUT THE ATTACHMENT NEED NOT BE DETAILED ON THE PLANS. THESE COMPONENTS SHALL HAVE FLEXIBLE CONNECTIONS PROVIDED BETWEEN THE COMPONENT AND ASSOCIATED DUCTWORK, PIPING AND CONDUIT.

A. COMPONENTS WEIGHING LESS THAN 400 POUNDS AND HAVE A CENTER OF MASS LOCATED 4 FEET OR LESS ABOVE THE ADJACENT FLOOR OR ROOF LEVEL THAT DIRECTLY SUPPORT THE COMPONENT.
B. COMPONENTS WEIGHING LESS THAN 20 POUNDS, OR IN THE CASE OF DISTRIBUTED SYSTEMS, LESS THAN 5 POUNDS PER FOOT, WHICH ARE SUSPENDED FROM A ROOF OR FLOOR OR HUNG FROM A WALL.

FOR THOSE ELEMENTS THAT DO NOT REQUIRE DETAILS ON THE APPROVED DRAWINGS, THE INSTALLATION SHALL BE SUBJECT TO THE APPROVAL OF THE DESIGN PROFESSIONAL IN GENERAL RESPONSIBLE CHARGE OR STRUCTURAL ENGINEER DELEGATED RESPONSIBILITY AND THE DSA DISTRICT STRUCTURAL ENGINEER. THE PROJECT INSPECTOR WILL VERIFY THAT ALL COMPONENTS AND EQUIPMENT HAVE BEEN ANCHORED IN ACCORDANCE WITH ABOVE REQUIREMENTS.

PIPING, DUCTWORK, AND ELECTRICAL DISTRIBUTION SYSTEM BRACING NOTE

PIPING, DUCTWORK, AND ELECTRICAL DISTRIBUTION SYSTEMS SHALL BE BRACED TO COMPLY WITH THE FORCES AND DISPLACEMENTS PRESCRIBED IN ASCE 7-10 SECTION 13.3 AS DEFINED IN ASCE 7-10 SECTION 13.6.5.6, 13.6.7, 13.6.8, AND 2019 CBC SECTION 1617A.1.24, 1617A.1.25 AND 1617A.1.26

THE METHOD OF SHOWING BRACING AND ATTACHMENTS TO THE STRUCTURE FOR THE IDENTIFIED DISTRIBUTION SYSTEM ARE AS NOTED BELOW. WHEN BRACING AND ATTACHMENTS ARE BASED ON A PRE-APPROVED INSTALLATION GUIDE (E.G., SMACNA OR OSHPD OPM) COPIES OF THE BRACING SYSTEM INSTALLATION GUIDE OR MANUAL SHALL BE AVAILABLE ON THE JOBSITE PRIOR TO THE START OF AND DURING THE HANGING AND BRACING OF THE DISTRIBUTION SYSTEMS. THE STRUCTURAL ENGINEER OF RECORD SHALL VERIFY THE ADEQUACY OF THE STRUCTURE TO SUPPORT THE HANGER AND THE BRACE LOADS.

MECHANICAL PIPING (MP), MECHANICAL DUCTS (MD), PLUMBING PIPING (PP), ELECTRICAL DISTRIBUTION (E)

MP ☒ MD ☒ PP ☐ E ☐ OPTION 1: DETAILED ON THE APPROVED DRAWINGS AND PROJECT SPECIFIC NOTES AND DETAILS

COPIES OF THE OPM MANUAL(S) SHALL BE ON THE JOBSITE PRIOR TO START OF HANGING AND BRACING OF THE DUCTWORK AND PIPE DISTRIBUTION SYSTEMS.

MECHANICAL LEGEND

SYMBOL	ABBREVIATION	DESCRIPTION
	AFF	ABOVE FINISHED FLOOR
	AL	ACOUSTICALLY LINED
	BOD	BOTTOM OF DUCT
	CFM	CUBIC FEET PER MINUTE
	BDD	DAMPER: BACKDRAFT
	FSD	DAMPER: FIRE/SMOKE
	FD	DAMPER: FIRE
	MVD	DAMPER: MANUAL VOLUME
	Ø	DIAMETER
	DN	DOWN
	DS	DISCONNECT SWITCH
		DUCT SMOKE DETECTOR
	EER	ENERGY EFFICIENCY RATIO
	EA	EXHAUST AIR
	F	FAN
	FLA	FULL LOAD AMPS
		FLEXIBLE DUCT
	HP	HORSEPOWER
	MCA	MINIMUM CIRCUIT AMPACITY
	MOP	MAXIMUM OVERCURRENT PROTECTION
	MS	MOTOR STARTER
	RL	REFRIGERANT LIQUID
	RS	REFRIGERANT SUCTION
	OA	OUTSIDE AIR
	RA	RETURN AIR
	SA	SUPPLY AIR
	TA	TRANSFER AIR
	TP	RATED THRU PENETRATION
	SEER	SEASONAL EER
	SAD	SEE ARCHITECTURAL DRAWING
	SSD	SEE STRUCTURAL DRAWING
	CO_2	SENSOR: CARBON DIOXIDE
	T	THERMOSTAT
	TYP	TYPICAL
	UON	UNLESS OTHERWISE NOTED
	WT	WEIGHT
	24x12	RECTANGULAR DUCT - INCHES
	12"	ROUND DUCT - INCHES

AIR DISTRIBUTION

STYLE	MFR	MODEL NO	APPLICATION	DESCRIPTION	INSTALLATION NOTES
A	TITUS	TDC	SUPPLY AIR CEILING DIFFUSER	LOUVERED FACE, 4-WAY DEFLECTION, WHITE ENAMEL, ROUND NECK	LAY-IN CEILING WITH SESIMIC HANGER CLIP
B		350ZFL	RETURN AIR SIDEWALL REGISTER	ALUMINUM LOUVERED, 3/4" BLADE SPACING, 0 DEGREE DEFLECTION, BLADES PARALLE TO LONG DIMENSION, WHITE ENAMEL	SIDEWALL FLUSH MOUNT REGISTER

CEILING DIFFUSER CALL OUT DESCRIPTION:

NECK SIZE → 1424 ← MODULE SIZE
CFM → 200A ← STYLE

SIDEWALL REGISTER CALL OUT DESCRIPTION:

NECK SIZE → 24X14
CFM → 200A ← STYLE

310 Nova Albion Way
San Rafael, CA 94903 415.492.3200

Terra Linda High School Modernization

310 Nova Albion Way
San Rafael, CA 94903
415.492.3200

Date	Issued For
1/17/2020	DSA Submittal

MECHANICAL GROUP
8517 Earhart Rd, Suite 230
Oakland, CA 94621
510-569-2000

HED
417 Montgomery Street
Suite 400
San Francisco, California
94104 USA
(415) 981-2345
WWW.HED.DESIGN

© 2020

NOTES AND LEGEND

M-001

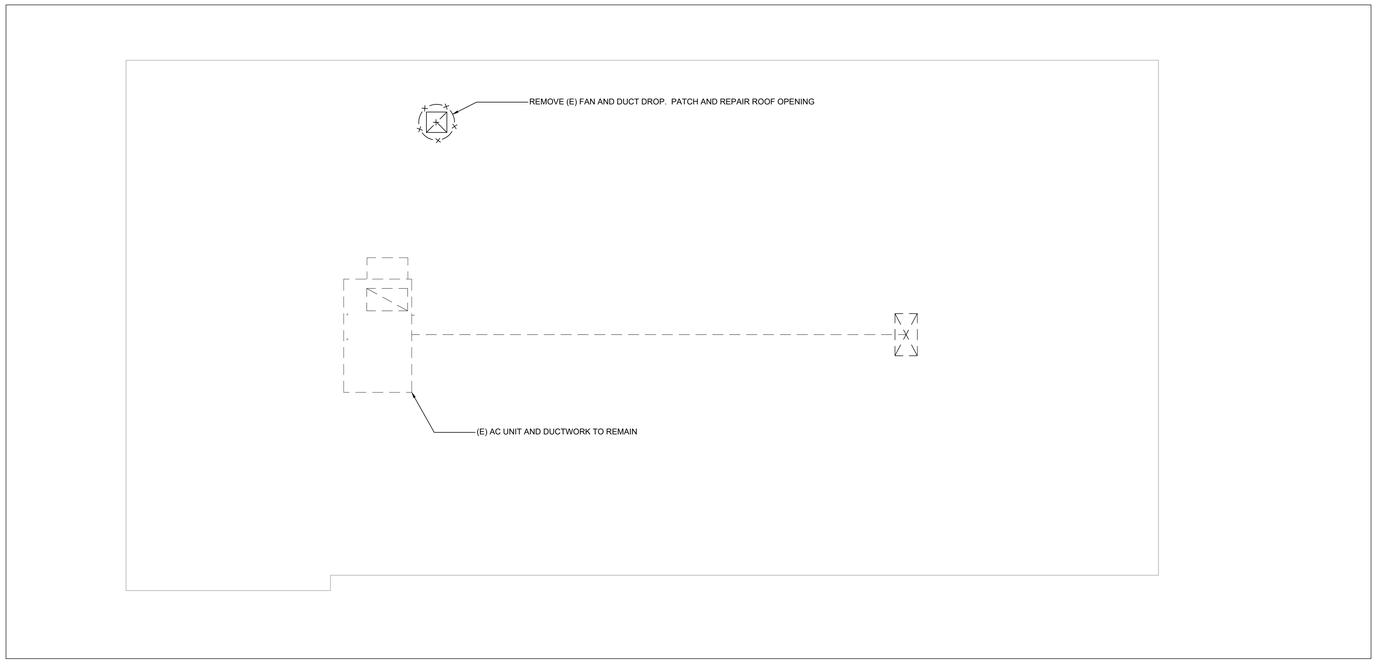

2 DEMOLITION ROOF PLAN
SCALE: 1/4"=1'-0"

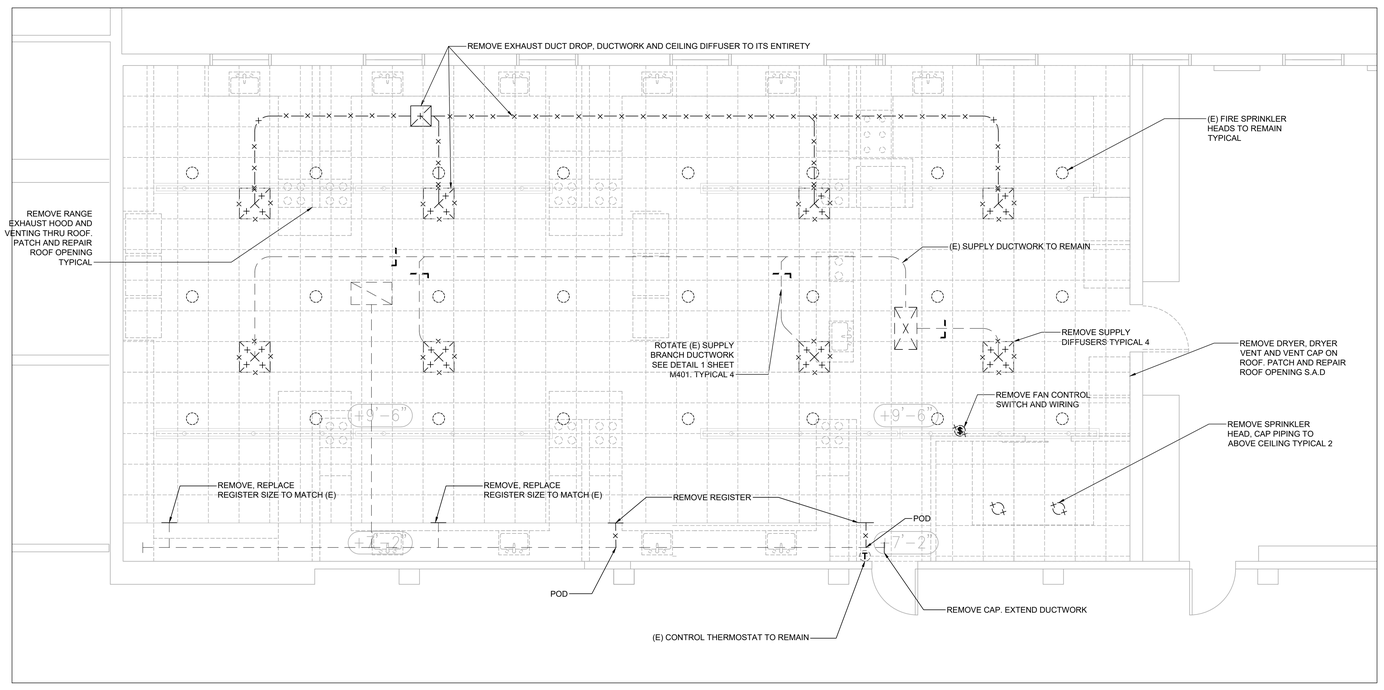

1 DEMOLITION FLOOR PLAN
SCALE: 1/4"=1'-0"

SR
310 Nova Albion Way
San Rafael, CA 94903 415.492.3200

Terra Linda High School Modernization

310 Nova Albion Way
San Rafael, CA 94903
415.492.3200

Date	Issued For
1/17/2020	DSA Submittal

HM MECHANICAL GROUP
8517 Earhart Rd, Suite 230
Oakland, CA 94621
510-569-2000

HED
417 Montgomery Street
Suite 400
San Francisco, California
94104 USA
(415) 981-2345
WWW.HED.DESIGN

© 2020

MECHANICAL
DEMO PLANS

M400

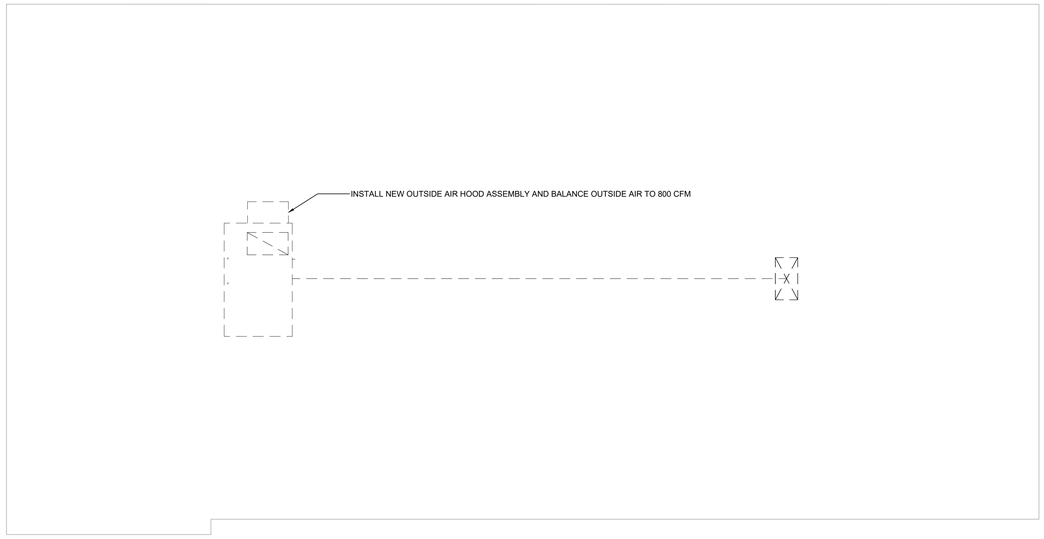

2 ROOF PLAN
SCALE: 1/4"=1'-0"

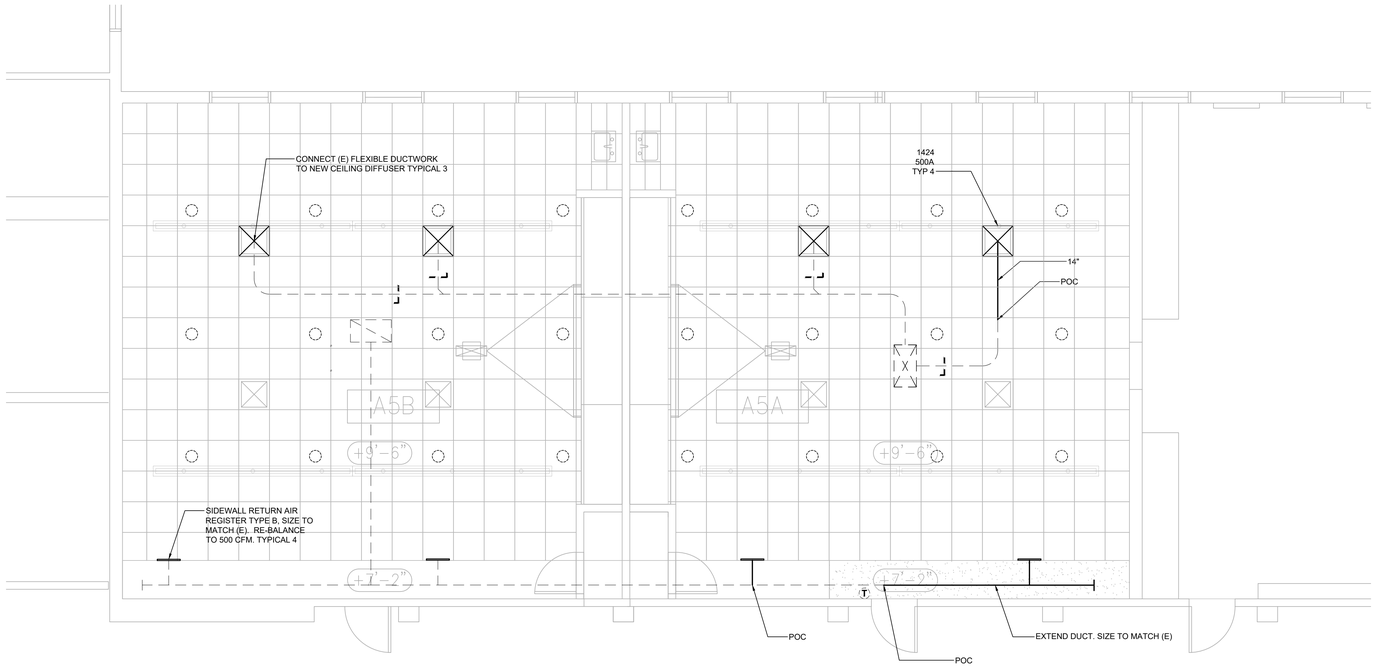

1 FLOOR PLAN
SCALE: 1/4"=1'-0"

SR
310 Nova Albion Way
San Rafael, CA 94903 415.492.3200

Terra Linda High School
Modernization

310 Nova Albion Way
San Rafael, CA 94903
415.492.3200

Date	Issued For
1/17/2020	DSA Submittal

HM
MECHANICAL GROUP
8517 Earhart Rd, Suite 230
Oakland, CA 94621
510-569-2000

HED
417 Montgomery Street
Suite 400
San Francisco, California
94104 USA

(415) 981-2345

WWW.HED.DESIGN

© 2020

MECHANICAL
NEW PLANS

M401

GENERAL NOTES

1. BEFORE COMMENCEMENT OF WORK, THE CONTRACTOR SHALL VERIFY THE EXACT LOCATIONS, ELEVATIONS AND CHARACTERISTICS OF ALL UTILITIES AND PIPING, AND SHALL IMMEDIATELY NOTIFY THE ARCHITECT OF ANY DISCREPANCIES.
2. EXACT LOCATIONS AND MOUNTING HEIGHTS OF PLUMBING FIXTURES SHALL BE OBTAINED FROM THE ARCHITECTURAL DRAWINGS.
3. SEE ARCHITECTURAL DRAWINGS FOR ADA FIXTURE LOCATIONS AND MOUNTING HEIGHTS. (INSULATE ALL EXPOSED HOT AND COLD WATER AND DRAIN PIPING BELOW ADA LAVATORIES AND SINKS AND OFFSET P-TRAP AGAINST WALL. ALSO, ALL FLUSH VALVES SHALL BE TO WIDE SIDE OF STALL.)
4. TRAPS FOR ALL LAVATORIES AND SINKS SHALL TRAP STRAIGHT BACK TO WALL WITH ALL REQUIRED OFFSETS HAPPENING WITHIN THE WALL.
5. THE CONTRACTOR SHALL MAKE ALL ARRANGEMENTS WITH UTILITY COMPANIES FOR SERVICE IN THE NAME OF THE OWNER AND SHALL PAY ALL MATERIAL AND LABOR COSTS INCIDENTAL TO AN OPERABLE UTILITY SERVICE AS REQUIRED BY THE DESIGNATED GOVERNING AUTHORITIES OF THE CITY.
6. ALL PLUMBING WORK SHALL BE INSTALLED SO AS TO AVOID INTERFERENCE WITH ELECTRICAL AND MECHANICAL EQUIPMENT AND STRUCTURAL FRAMING.
7. THE CONTRACTOR SHALL COORDINATE THE LOCATION OF ALL CEILING ACCESS PANELS WITH THE ARCHITECTURAL REFLECTED CEILING PLANS AND THE ELEC. LIGHTING LAYOUT.
8. THE PLUMBING CONTRACTOR SHALL PROVIDE THE WATER, SEWER AND STORM DRAIN SYSTEMS TO A POINT OF CONNECTION SHOWN ON FLOOR PLANS AND SHALL MEET THE INVERT ELEVATION AS FIELD VERIFIED WHILE MAINTAINING REQUIRED PIPE GRADE.
9. ANY ALTERATIONS TO A STRUCTURAL MEMBER, SUCH AS CUTTING, BORING, BRAZING, DRILLING, WELDING, ETC. SHALL HAVE PRIOR WRITTEN APPROVAL OF ARCHITECT AND STRUCTURAL ENGINEER.
10. ALL CLEANOUTS SHALL BE INSTALLED WHERE READILY ACCESSIBLE. THE CONTRACTOR SHALL COORDINATE ALL CLEANOUT LOCATIONS WITH EQUIPMENT, CABINETS, ETC., AND THE ARCHITECT PRIOR TO ANY INSTALLATION.
11. CONTRACTOR TO PROVIDE WATER HAMMER ARRESTORS AS MANUFACTURED BY JAY R. SMITH. WATER HAMMER ARRESTORS SHALL BE INSTALLED PER MANUFACTURER'S RECOMMENDATIONS ON ALL DOMESTIC WATER BRANCH LINES SERVING FIXTURES.
12. ALL PLUMBING FIXTURE VENTS TO TERMINATE A MIN. OF 12 INCHES FROM ANY VERTICAL SURFACE AND 10 FEET FROM ANY OUTSIDE AIR INTAKES.
13. ALL VALVES, UNIONS, ETC. TO BE SAME SIZE AS PIPE UNLESS OTHERWISE INDICATED ON DRAWINGS.
14. CONTRACTOR SHALL COORDINATE LAYOUT OF ALL BELOW GRADE PIPING AND COMPONENTS WITH GENERAL CONTRACTOR PRIOR TO BID TO DETERMINE EXTENT OF REQUIRED SAW CUTTING, EXCAVATION, AND SUBSEQUENT REPAIR/RESTORATION OF ALL AFFECTED HARDSCAPE AND SOFTSCAPE SURFACES. ALL SUCH ITEMS SHALL BE INCLUDED IN BID.
15. BEFORE FABRICATION OR INSTALLATION THE CONTRACTOR SHALL VERIFY EXACT LOCATIONS OF ALL MECHANICAL EQUIPMENT AND EQUIPMENT PROVIDED UNDER ANOTHER SECTION OF SPECIFICATIONS. EXACT ROUGH-IN LOCATIONS AND REQUIREMENTS SHALL BE COORDINATED IN FIELD.
16. ALL POINTS OF CONNECTION SHALL BE COORDINATED WITH THE GENERAL CONTRACTOR PRIOR TO BID.
17. ALL WASTE AND VENT PIPING SHALL SLOPE AT 2% UNLESS OTHERWISE INDICATED.
18. ALL VALVES, WATER HAMMER ARRESTORS OR OTHER EQUIPMENT SHOWN IN WALLS OR ABOVE NON-ACCESSIBLE CEILINGS SHALL BE INSTALLED BEHIND AN ACCESS PANEL.
19. THESE DRAWINGS SHALL BE READ IN CONJUNCTION WITH AND BE CONSIDERED TO BE A PART OF SEPARATE AND COMPLETE MECHANICAL SPECIFICATIONS.
20. CONNECTION BETWEEN INCOMPATIBLE MATERIALS ABOVE GRADE AND INSIDE BUILDING SHALL BE MADE WITH TWO (2) DIELECTRIC UNIONS SEPARATED BY A SIX INCH (6") SECTION OF RED BRASS PIPE.
21. ALL EXTERIOR GAS COCKS, WATER SHUT OFF VALVES AND/OR SEWER CLEANOUTS BELOW GROUND SHALL BE INSTALLED IN YARD BOXES WITH THE COVERS CONSPICUOUSLY MARKED "GAS", "WATER", AND "SEWER" RESPECTIVELY.
22. THE CONTRACTOR SHALL VERIFY THE EXACT ELEVATIONS AND LOCATION OF EXISTING DRAINAGE SYSTEM PIPING PRIOR TO CONNECTION OF ANY PIPING.
23. ALL HORIZONTAL PIPING LINES EXTENDED AND CONNECTED TO EQUIPMENT SHALL BE RUN AT THE HIGHEST POSSIBLE ELEVATIONS AND NOT LESS THAN 6" ABOVE THE FLOOR TO PROVIDE CLEARANCE FOR CLEANING. AT WALL OR COLUMN LOCATIONS, PIPING ROUGH-IN SHALL BE STUBBED IN WALLS WHENEVER POSSIBLE.
24. THE CONTRACTOR SHALL BE RESPONSIBLE FOR PATCHING AND REPAIRING ALL AREAS WHICH ARE DAMAGED BY HIS OPERATIONS. IN ADDITION, THE CONTRACTOR SHALL RESTORE TO THEIR ORIGINAL CONDITION ALL EXISTING TO REMAIN STRUCTURE AND NEW CONSTRUCTION DAMAGED BY HIS OPERATIONS.
25. THE CONTRACTOR SHALL BE RESPONSIBLE FOR PATCHING AND REPAIRING ALL PAVED AREAS WHICH ARE EXCAVATED AND/OR DAMAGED BY HIS OPERATIONS. IN ADDITION, THE CONTRACTOR SHALL RESTORE TO THEIR ORIGINAL CONDITION ALL PLANTED AREAS DAMAGED BY HIS OPERATIONS.
26. ALL PATCHING AND REPAIRING OF CONCRETE PAVING AND/OR WALKS SHALL BE UNDER ANOTHER SECTION OF THE SPECIFICATIONS.
27. ALL EXISTING PIPING DAMAGED DURING EXCAVATION SHALL BE REPAIRED WITH MATERIALS TO MATCH EXISTING BY THE CONTRACTOR AT NO COST TO THE OWNER.
28. ALL CUTTING OF EXISTING PAVING, WALKS AND/OR FLOORS SHALL BE BY MACHINE SAW CUTTING. HOLES FOR PIPES IN CONCRETE WALLS OR FLOORS SHALL BE DONE BY CORE DRILLING EQUIPMENT.
29. ALL PIPING, EXCEPT PIPING OF NONFERROUS MATERIAL, INSTALLED WITHIN THE GROUND SHALL BE PROTECTED AGAINST CORROSION BY A PROTECTIVE COVERING SUITABLE FOR THE PURPOSE AND SUBJECT TO THE APPROVAL OF THE BUILDING OFFICIAL. ANY PIPING SUBJECT TO UNDUE CORROSIVE ACTION SHALL BE PROTECTED IN A MATTER SUITABLE FOR THE PURPOSE AND SUBJECT TO THE APPROVAL OF THE BUILDING OFFICIAL.
30. ALL PENETRATIONS AND OPENINGS IN PARTY WALLS AND ROOF/FLOOR/CEILING ASSEMBLIES DUE TO PLUMBING WORK SHALL BE SEALED LINED, INSULATED OR OTHERWISE TREATED TO MAINTAIN THE REQUIRED FIRE AND SOUND RATING.

M/E/P COMPONENT ANCHORAGE NOTES

ALL MECHANICAL, PLUMBING, AND ELECTRICAL COMPONENTS SHALL BE ANCHORED OR INSTALLED PER THE DETAILS ON THE DSA APPROVED CONSTRUCTION DOCUMENTS. WHERE NO DETAIL IS INDICATED, THE FOLLOWING COMPONENTS SHALL BE ANCHORED OR BRACED TO MEET THE FORCED AND DISPLACEMENT REQUIREMENTS PRESCRIBED IN THE 2019 CBC, SECTIONS 1616A.1.23 THROUGH 1616A.1.26 AND ASCE 7-10 CHAPTER 26 AND 13.

1. ALL PERMANENT EQUIPMENT AND COMPONENTS.
2. TEMPORARY OR MOVABLE EQUIPMENT THAT IS PERMANENTLY ATTACHED (E.G. HARD WIRED) TO THE BUILDING UTILITY SERVICES SUCH AS ELECTRICITY, GAS OR WATER.
3. MOVABLE EQUIPMENT WHICH IS STATIONED IN ONE PLACE FOR MORE THAN 8 HOURS AND HEAVIER THAN 400 POUNDS ARE REQUIRED TO BE ANCHORED WITH TEMPORARY ATTACHMENTS.

THE ATTACHMENT OF THE FOLLOWING MECHANICAL AND ELECTRICAL COMPONENTS SHALL BE POSITIVELY ATTACHED TO THE STRUCTURE, BUT NEED NOT BE DETAILED ON THE PLANS. THESE COMPONENTS SHALL HAVE FLEXIBLE CONNECTIONS PROVIDED BETWEEN THE COMPONENT AND ASSOCIATED DUCTWORK, PIPING AND CONDUIT.

A. COMPONENTS WEIGHING LESS THAN 400 POUNDS AND HAVE A CENTER OF MASS LOCATED 4 FEET OR LESS ABOVE THE ADACENT FLOOR OR ROOF LEVEL THAT DIRECTLY SUPPORT THE COMPONENT.

B. COMPONENTS WEIGHING LESS THAN 20 POUNDS, OR IN THE CASE OF DISTRIBUTED SYSTEMS, LESS THAN 5 POUNDS PER FOOT, WHICH ARE SUSPENDED FROM A ROOF OR FLOOR OR HUNG FROM A WALL.

FOR THOSE ELEMENTS THAT DO NOT REQUIRE DETAILS ON THE APPROVED DRAWINGS, THE INSTALLATION SHALL BE SUBJECT TO THE APPROVAL OF THE STRUCTURAL ENGINEER OF RECORD AND THE DSA DISTRICT STRUCTURAL ENGINEER. THE PROJECT INSPECTOR WILL VERIFY THAT ALL COMPONENTS AND EQUIPMENT HAVE BEEN ANCHORED IN ACCORDANCE WITH ABOVE REQUIREMENTS.

PIPING DISTRIBUTION BRACING NOTES

PIPING, DUCTWORK, AND ELECTRICAL DISTRIBUTION SYSTEMS SHALL BE BRACED TO COMPLY WITH THE FORCES AND DISPLACEMENTS PRESCRIBED IN ASCE 7-10 SECTION 13.3 AS DEFINED IN ASCE 7-10 SECTION 13.6.8, 13.6.7 AND 13.6.5.6 AND 2019 CBC SECTION 1616A.1.23, 1616A.1.24, 1616A.1.25 AND 1616A.1.26.

THE BRACING AND ATTACHMENTS TO THE STRUCTURE SHALL BE DETAILED ON THE APPROVED DRAWINGS OR THEY SHALL COMPLY WITH ONE OF THE OSHPD PRE-APPROVAL OF MANUFACTURER'S CERTIFICATIONS (OPM) AS MODIFIED TO SATISFY ANCHORAGE REQUIREMENTS OF ACI 318-11, APPENDIX D.

COPIES OF THE OPM MANUAL(S) SHALL BE AVAILABLE ON THE JOB SITE PRIOR TO THE START OF HANGING AND BRACING OF THE PIPE, DUCTWORK, AND ELECTRICAL DISTRIBUTION SYSTEMS.

THE STRUCTURAL ENGINEER OF RECORD SHALL VERIFY THE ADEQUACY OF THE STRUCTURE TO SUPPORT THE HANGER AND BRACE LOADS.

PIPING, DUCTWORK, AND ELECTRICAL DISTRIBUTION SYSTEM BRACING NOTE

PIPING, DUCTWORK, AND ELECTRICAL DISTRIBUTION SYSTEMS SHALL BE BRACED TO COMPLY WITH THE FORCES AND DISPLACEMENTS PRESCRIBED IN ASCE 7-10 SECTION 13.3 AS DEFINED IN ASCE 7-10 SECTION 13.6.5.6, 13.6.7, 13.6.8, AND 2019 CBC SECTION 1617A.1.24, 1617A.1.25 AND 1617A.1.26

THE METHOD OF SHOWING BRACING AND ATTACHMENTS TO THE STRUCTURE FOR THE IDENTIFIED DISTRIBUTION SYSTEM ARE AS NOTED BELOW. WHEN BRACING AND ATTACHMENTS ARE BASED ON A PRE-APPROVED INSTALLATION GUIDE (E.G., SMACNA OR OSHPD OPM) COPIES OF THE BRACING SYSTEM INSTALLATION GUIDE OR MANUAL SHALL BE AVAILABLE ON THE JOBSITE PRIOR TO THE START OF AND DURING THE HANGING AND BRACING OF THE DISTRIBUTION SYSTEMS. THE STRUCTURAL ENGINEER OF RECORD SHALL VERIFY THE ADEQUACY OF THE STRUCTURE TO SUPPORT THE HANGER AND THE BRACE LOADS.

MECHANICAL PIPING (MP), MECHANICAL DUCTS (MD), PLUMBING PIPING (PP), ELECTRICAL DISTRIBUTION (E)

MP MD PP ☒ E ☐ OPTION 1: DETAILED ON THE APPROVED DRAWINGS AND PROJECT SPECIFIC NOTES AND DETAILS

COPIES OF THE OPM MANUAL(S) SHALL BE ON THE JOBSITE PRIOR TO START OF HANGING AND BRACING OF THE DUCTWORK AND PIPE DISTRIBUTION SYSTEMS.

PLUMBING LEGEND

SYMBOL	ABBREVIATION	DESCRIPTION
——— W ———	W	SANITARY WASTE/SEWER PIPING
——— GW ———	GW	GREASE WASTE PIPING
——— SD ———	SD	STORM DRAIN PIPING
——— OFD ———	OFD	OVERFLOW DRAIN PIPING
- - - - - - - - - - - -	V	WASTE/SANITARY VENT PIPING
——— GV ———	GV	GREASE VENT PIPING
		DEMO FIXTURE/PIPING
——— ——— ———	(E)W	EXISTING SANITARY SEWER PIPING
- - - - - - - - - - - -	(E)V	EXISTING SANITARY VENT PIPING
——— — ———	CW	DOMESTIC COLD WATER PIPING
——— — — ———	HW	DOMESTIC HOT WATER PIPING
——— — — — ———	HWR	DOMESTIC HOT WATER RETURN PIPING
——— ——— ———	(E)CW	EXISTING COLD WATER PIPING
——— ——— ———	(E)HW	EXISTING HOT WATER PIPING
——— ——— ———	(E)HWR	EXISTING HOT WATER RETURN PIPING
——— G ———	G	NATURAL GAS PIPING
——— MPG ———	MPG	MEDIUM PRESSURE NATURAL GAS PIPING
——— G ———	(E)G	EXISTING NATURAL GAS PIPING
——— MPG ———	(E)MPG	EXISTING MEDIUM PRESSURE NATURAL GAS PIPING
——— CD ———	CD	CONDENSATE DRAIN PIPING
C		PIPE GOING DOWN
O		PIPE GOING UP
⊃		TEE
⌽ ⊛	FCO	FLOOR CLEANOUT/CLEANOUT TO GRADE
ᑕC		P-TRAP
	POC	POINT OF CONNECTION
⫼	WCO	WALL CLEANOUT
⌐		PIPE CAP
—┼	HB	HOSE BIBB
⋈	SOV	SHUT-OFF VALVE
⋈	SOVAP	SHUT-OFF VALVE BEHIND ACCESS PANEL
⋈	SOVYB	SHUT-OFF VALVE IN YARD BOX
⋈		PLUG VALVE
		GAS COCK VALVE
		PRESSURE REDUCING VALVE
⊬		CHECK VALVE
	FD	FLOOR DRAIN
	FS	FLOOR SINK
XX-X		EQUIPMENT OR FIXTURE
	CONT.	CONTINUED/CONTINUATION
	DFM	DISTANCE FROM METER
	FR.	FROM
	BEL.	BELOW
	DN.	DOWN
	VTR	VENT THROUGH ROOF
	AP	ACCESS DOOR
	NIC	NOT IN CONTRACT
	REF.	REFERENCE
	S.A.D.	SEE ARCHITECTURAL DRAWINGS
	S.M.D.	SEE MECHANICAL DRAWINGS
	S.C.D.	SEE CIVIL DRAWINGS
	S.S.D.	SEE STRUCTURAL DRAWINGS
	SF	SQUARE FEET

PLUMBING FIXTURE SCHEDULE

FIXTURE	MARK	ROUGH IN CONNECTIONS				DESCRIPTION
		HW	CW	WASTE	VENT	
CLASSROOM SINK	S-1	--	1/2"	2"	2"	JUST ARB-ADA-2451-A-GR-T COUNTER MOUNTED, 18 GAUGE, TYPE 304 STAINLESS STEEL, SELF RIMMING. FAUCET: CHICAGO FAUCET 350-E35VPABCP DECK MOUNTED SINGLE HOLE, CHROME PLATED SOLID BRASS, SWING GOOSENECK SPOUT 1.5 GPM PRESSURE COMPENSATING SOFTFLO VANDAL PROOF AERATOR. ANGLE STOPS/P-TRAP/PIPE WRAP: SEE SECTION 22 00 00

NOTES:

1. ITEM DESCRIPTIONS INCLUDED IN THIS SCHEDULE ARE INTENDED TO DESCRIBE GENERAL FIXTURE CONFIGURATIONS, AND DO NOT INCLUDE ALL REQUIREMENTS. REFER TO SPECIFICATION SECTION 22 00 00 FOR ADDITIONAL REQUIREMENTS.
2. REFER TO ARCHITECTURAL DRAWINGS FOR MOUNTING HEIGHTS AND REQUIRED CLEARANCES OF ALL FIXTURES.
3. ALL FIXTURES, TRIM, AND VALVING SHALL COMPLY WITH CALIFORNIA'S LEAD FREE PLUMBING LAW, HEALTH AND SAFETY CODE AND CA ASSEMBLY BILL 1953.

SR

310 Nova Albion Way
San Rafael, CA 94903 415.492.3200

Terra Linda High School Modernization

310 Nova Albion Way
San Rafael, CA 94903
415.492.3200

Date	Issued For
1/17/2020	DSA Submittal

HM MECHANICAL GROUP
8517 Earhart Rd, Suite 230
Oakland, CA 94621
510-569-2000

HED
417 Montgomery Street
Suite 400
San Francisco, California
94104 USA

(415) 981-2345

WWW.HED.DESIGN

REGISTERED PROFESSIONAL ENGINEER JOHN A. POOL No. M34214 MECHANICAL STATE OF CALIFORNIA

© 2020

NOTES AND LEGEND

P-001

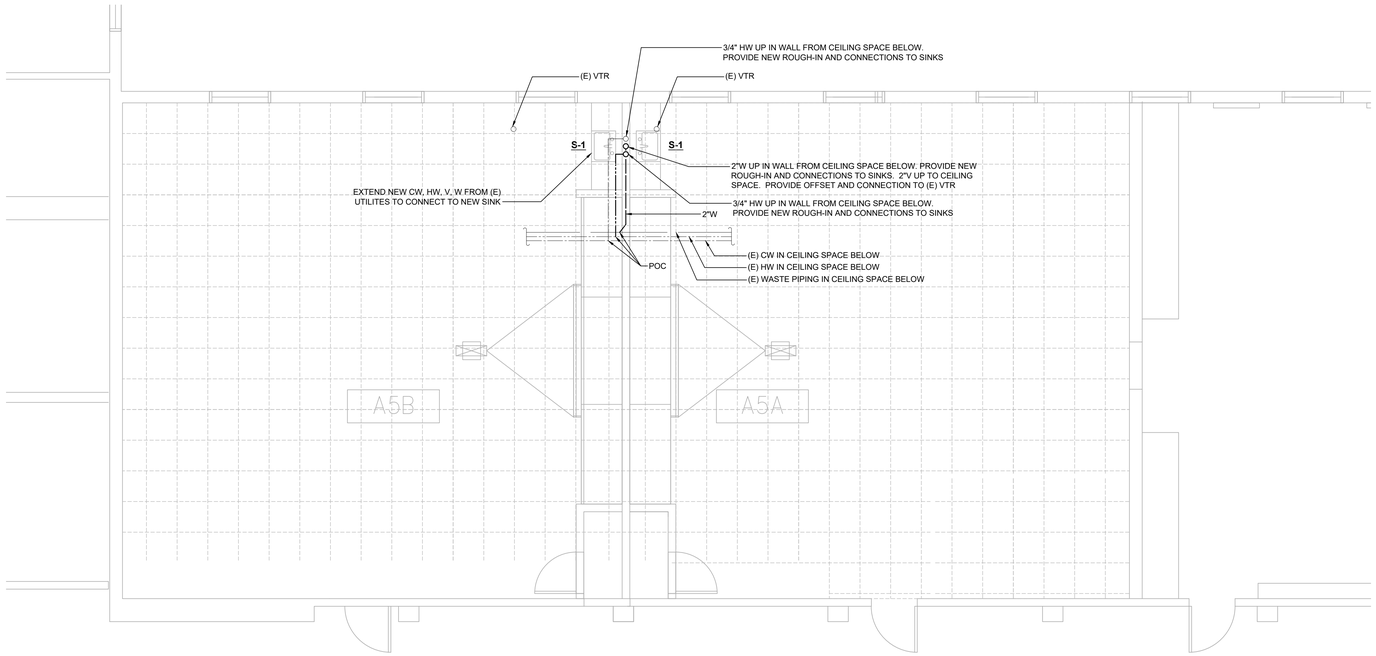

2 FLOOR PLAN
SCALE: 1/4"=1'-0"

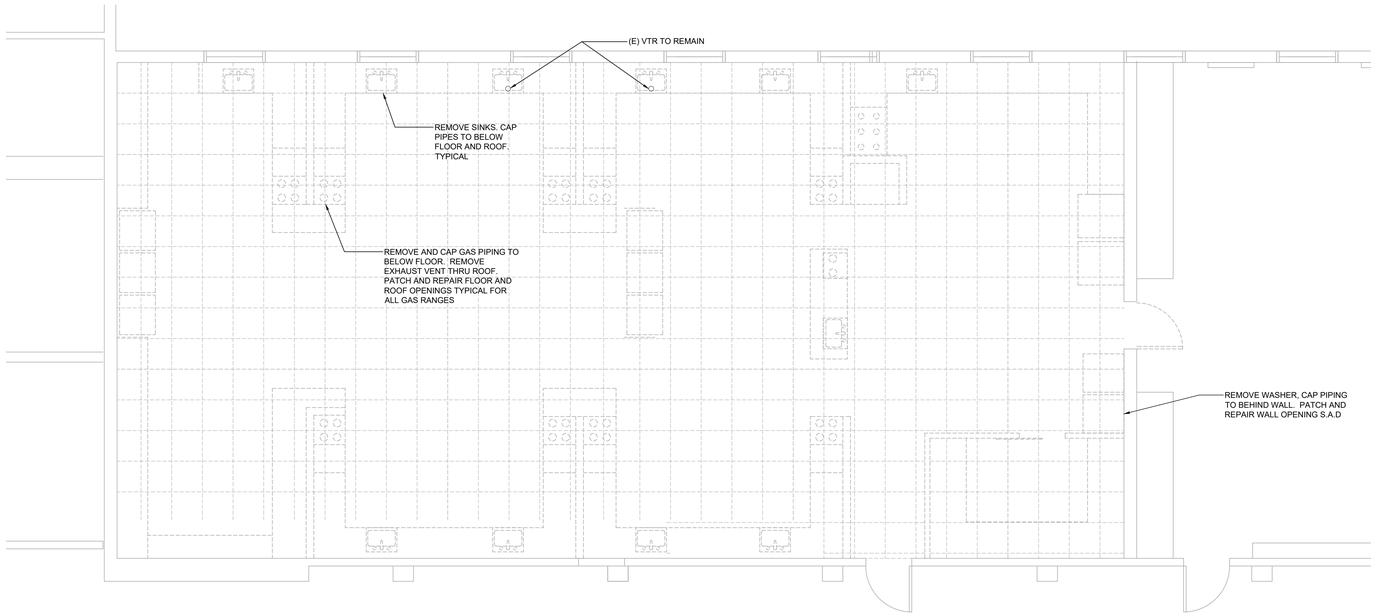

1 DEMOLITION PLAN
SCALE: 1/4"=1'-0"

SR
310 Nova Albion Way
San Rafael, CA 94903 415.492.3200

Terra Linda High School Modernization

310 Nova Albion Way
San Rafael, CA 94903
415.492.3200

Date	Issued For
1/17/2020	DSA Submittal

HM MECHANICAL GROUP
8517 Earhart Rd, Suite 230
Oakland, CA 94621
510-569-2000

HED
417 Montgomery Street
Suite 400
San Francisco, California
94104 USA
(415) 981-2345
WWW.HED.DESIGN

© 2020

PLUMBING PLANS

P400

GENERAL NOTES

1. THE COMPLETE ELECTRICAL INSTALLATION SHALL BE IN ACCORDANCE WITH THE LATEST EDITION OF THE CALIFORNIA ELECTRICAL CODE, SPECIFICATIONS AND STANDARD, THE LATEST RULES AND REGULATIONS OF THE SAFETY ORDERS ISSUED BY THE DIVISION OF INDUSTRIAL SAFETY, THE NATIONAL BOARD OF FIRE UNDERWRITERS AND ALL APPLICABLE STATE AND LOCAL CODES ISSUED BY AUTHORITIES HAVING JURISDICTION.
2. PRIOR TO SUBMITTING PROPOSAL, BIDDER SHALL EXAMINE ALL GENERAL CONSTRUCTION DRAWINGS. VISIT CONSTRUCTION SITE AND ATTEND THE PRE-BID MEETING TO BE FAMILIAR WITH EXISTING CONDITIONS UNDER WHICH HE WILL HAVE TO OPERATE AND WHICH WILL IN ANYWAY AFFECT THE WORK UNDER THIS CONTRACT. NO SUBSEQUENT ALLOWANCE WILL BE MADE IN THIS CONNECTION IN BEHALF OF THE CONTRACTOR FOR ANY ERROR OR NEGLIGENCE ON HIS PART.
3. THIS CONTRACTOR SHALL INCLUDE ALL CONTINGENCIES WHICH MAY ARISE AND WHICH MAY BE REQUIRED BY ALTERATION AND DEMOLITION WORK. THIS IS TO INCLUDE ALL REMOVAL, RELOCATION AND REWORKING OF ELECTRICAL OUTLETS, CONDUITS, WIRING AND ITEMS FOR ELECTRICAL EQUIPMENT REQUIRED AND ANY NECESSARY SPLICING OR EXTENSION OF EXISTING CONDUIT AND WIRING SYSTEMS. THE ELECTRICAL CONTRACTOR SHALL VISIT JOB SITE AND DETERMINE EXTENT OF THE WORK.
4. FIELD VERIFY TO CONFIRM ALL FIRE RESISTIVE CEILINGS AND WALLS. PROVIDE FIRE STOP SEALS PER UNIFORM BUILDING CODE FOR CONDUIT PENETRATION THROUGH FIRE RESISTIVE FLOORS, WALLS AND CEILINGS.
5. ALL ELECTRICAL MATERIALS AND EQUIPMENT SHALL BE LISTED BY UNDERWRITER'S LABORATORIES AND BEAR THEIR LABEL.
6. CONDUIT ROUTING SHOWN IS ESSENTIALLY DIAGRAMMATIC. CONTRACTOR SHALL LAYOUT RUNS TO SUIT FIELD CONDITIONS AND THE COORDINATION REQUIREMENTS OF OTHER TRADES. ALL EXPOSED CONDUIT, BOXES, FITTINGS, SUPPORT, ETC. SHALL BE PAINTED TO MATCH ADJACENT SURFACES.
7. THE CONTRACTOR SHALL CONSULT THE ARCHITECTURAL AND OTHER DRAWINGS RELATED TO THIS PROJECT FOR ADDITIONAL WORK TO BE PROVIDED.
8. ANY POWER SHUTDOWN SHALL BE COORDINATED WITH SCHOOL DISTRICT CONSTRUCTION COORDINATOR. A SHUTDOWN SCHEDULE SHALL BE PRESENTED TO SCHOOL DISTRICT FOR APPROVAL TWO WEEKS PRIOR TO COMMENCEMENT OF WORK. SHUTDOWN SHALL BE PERFORMED IN OVERTIME HOURS IF SO DIRECTED BY SCHOOL DISTRICT.
9. ALL FEEDER AND BRANCH CIRCUIT CONDUITS SHALL BE INSTALLED CONCEALED IN FINISHED AREA, UNLESS OTHERWISE NOTED. CUT AND PATCH (E) WALL OR CEILING AS REQUIRED.
10. ALL PENETRATIONS THROUGH FIRE RESISTIVE WALLS SHALL BE TOTALLY SEALED TO PREVENT THE SPREAD OF SMOKE, FIRE, TOXIC GASES, AND WATER THROUGH THE PENETRATION BEFORE, DURING AND AFTER A FIRE CONDITION. THE FIRE RATING OF THE SEALED PENETRATION SHALL BE AT LEAST THAT OF THE WALL INTO WHICH IT IS INSTALLED. THE SEAL SHALL PERMIT THE VIBRATION, EXPANSION AND/OR CONTRACTION OF THE CONDUIT PASSING THROUGH THE PENETRATION WITHOUT THE SEAL CRACKING OR CRUMBLING.
11. UNLESS OTHERWISE INDICATED, THE MINIMUM SIZE OF CONDUCTORS SHALL BE 12 AWG THWN STRANDED COPPER ONL.Y.
12. ALL WIRES SHALL BE IN CONDUIT, THE MINIMUM SIZE OF CONDUIT SHALL BE 3/4", UNLESS OTHERWISE INDICATED.
13. GREEN INSULATED GROUND CONDUCTORS SHALL BE INSTALLED IN ALL FEEDER AND BRANCH CIRCUIT WIRING.
14. PROVIDE LABELS ON ALL EQUIPMENT AND DEVICES. LABELS SHALL BE SELF-ADHESIVE PHENOLIC TYPE AND WHITE LETTER ON BLACK BACKGROUND, PROVIDE BRADY OR DYMO TYPE LABELS (CIRCUIT IDENTIFICATION) FOR ALL SWITCHES AND RECEPTACLES.
15. THE CONTRACTOR SHALL PROVIDE TYPEWRITTEN DIRECTORIES FOR ALL ELECTRICAL PANELS INVOLVED IN THIS PROJECT. THE PANEL DIRECTORIES SHALL REFLECT THE AS-BUILT CIRCUITS. ONE COPY OF THE SCHEDULE SHALL BE TAPED TO THE INSIDE OF THE PANEL DOOR, AND ONE COPY SHALL BE SUBMITTED TO THE ENGINEER AS AN "AS-BUILT" DRAWING.
16. ALL ELECTRICAL EQUIPMENT SHALL BE BRACED OR ANCHORED TO RESIST A HORIZONTAL FORCE ACTING IN ANY DIRECTION PER CBC REQUIREMENTS.
17. CERTAIN REMODELING OF ELECTRICAL FACILITIES WILL BE REQUIRED IN THE EXISTING BUILDING. THE DRAWINGS SHOWING LOCATION OF EQUIPMENT IN EXISTING AREAS ARE APPROXIMATE ONLY. THE CONTRACTOR SHALL CONCEAL ALL WORK; IF THIS NOT POSSIBLE, SURFACE RACEWAY SUCH AS WIREMOLD SHALL BE USED ONLY WITH THE APPROVAL OF THE ARCHITECT AND OWNER.
18. THE CONTRACTOR SHALL EMPLOY QUALIFIED, LICENSED IN STATE OF CALIFORNIA AND EXPERIENCED WORKMEN FOR THIS WORK. ALL RESTORATION WORK SHALL BE SUBJECT TO THE APPROVAL OF THE ARCHITECT AND/OR OWNER AND IOR.
19. WHERE CONDUIT IS ROUTED ON ROOF STRUCTURES, PROVIDE SUPPORT AT 10'-0" O.C. MAXIMUM.
20. ALL EXPOSED CONDUIT BELOW 7'-0" SHALL BE RSC AND ALL EXPOSED HARDWARE SHALL BE "HOT DIPPED" GALVANIZED. ALL INTERIOR CONDUITS MAY BE EMT, UNLESS OTHERWISE NOTED.
21. PROVIDE ARC-FLASH HAZARD WARNING ON ELECTRICAL EQUIPMENT PER CEC 20/6 ARC. 110.16. WARNING SIGNS SHALL BE WITH WHITE LETTERS ON RED BACKGROUND WITH MINIMUM 3/8 INCH HIGH LETTERING. INDOORS SIGN SHALL BE ENGRAVED PLASTIC LAMINATED INSTRUCTION SIGNS WITH APPROVED LEGEND WHERE INSTRUCTIONS ARE NEEDED FOR SYSTEM OR EQUIPMENT OPERATION. INSTALL METAL BACKED BUTYRATE SIGNS FOR OUTDOOR SYSTEM.
22. THE CONTRACTOR SHALL MAINTAIN AT THE JOB SITE, AN UP TO DATE "AS BUILT" DRAWING SET. THE "AS BUILT" DRAWING SET SHALL REFLECT ALL APPROVED CHANGES TO THE DESIGN DRAWINGS. THE "AS BUILT" DRAWING SET SHALL BE KEPT CLEAN AND IN GOOD CONDITION AND SHALL BE TURNED OVER TO THE OWNER AT THE COMPLETION OF THE PROJECT. THESE DRAWINGS SHALL BE UPDATED DAILY AND BE CHECKED WEEKLY BY IOR. THE PROGRESS PAYMENT IS TIED TO THEIR COMPLETION.
23. UPON COMPLETION OF THE WORK, THE CONTRACTOR SHALL SCHEDULE AND PERFORM A COMPLETE FUNCTIONAL TEST IN THE PRESENCE OF DSA IOR TO DEMONSTRATE TO THE OWNER THAT THE NEW INSTALLATION IS OPERATING AS INTENDED TEST RESULTS SHALL BE SENT TO DISTRICT FOR IOR AND AOR. ANY DEFECTS OR DEFICIENCIES IN THE MATERIALS OR WORK SHALL BE CORRECTED IMMEDIATELY BY AND AT THE CONTRACTOR'S EXPENSE.

LEGEND

Symbol	Description
	HOMERUN TO PANEL, HASHMARKS INDICATE NUMBER OF #12 AWG WIRES IF MORE THAN (3); (↿) INDICATES GROUND.
	CONDUIT AND CONDUCTORS CONCEALS IN WALL OR CEILING
	CONDUIT AND WIRES CONCEALED IN FLOOR OR UNDERGROUND
	CONDUIT STUBBED OUT IN ACCESSIBLE LOCATION, CAP AND MARK LOCATION
	SURFACE MOUNTED ELECTRICAL PANELBOARD, 277/480V
	SURFACE MOUNTED ELECTRICAL PANELBOARD, 120/208V
	RECESSED MOUNTED ELECTRICAL PANELBOARD, 120/208V
J	JUNCTION BOX OR PULL BOX, SIZE PER CODE.
	2'x4' LENSED LED LIGHT FIXTURE
$\$^{D}_{a,b}$	nPODM 2PDX SENSOR SWITCH nLIGHT 2-CHANNEL ON/OFF TOGGLE WITH RAISE/LOWER DIMMING SUBCRIPT "ab" DENOTES SWITCH LEGS
OS^{A}	nCM PDT 10 SENSORSWITCH nLIGHT CEILING MOUNT LOW VOLTAGE STANDARD RANGE / HIGH SENSITIVITY 360° DUAL TECHNOLOGY (DIGITAL PIR + MICROPHONICS) OCCUPANCY SENSOR.
PP	nPP16D POWER RELAY PACK: 16A, 120/277VAC W/0-10VDC DIMMING
	DUPLEX RECEPTACLE, NEMA 5-20R, 20AMP, 120V, +15" A.F.F. TO THE BOTTOM OF OUTLET BOX +48" MAX A.F.F. TO TOP OF OUTLET BOX
	FOURPLEX RECEPTACLE, NEMA 5-20R, 20AMP, 120V, +15" A.F.F. TO THE BOTTOM OF OUTLET BOX +48" MAX A.F.F. TO TOP OF OUTLET BOX
	CEILING MOUNTED DUPLEX RECEPTACLE, NEMA 5-20R, 20AMP, 120V
WAP	WIRELESS ACCESS POINT WITH (2) DATA PORTS WITH PLATE MOUNTED IN A SINGLE GANG BOX
	CEILING MOUNTED DATA OUTLET
SC	WALL MOUNTED COMBINATION OF CLOCK AND SPEAKER
S	CEILING MOUNTED SPEAKER
1	SHEET NOTE REFERENCE, SEE NOTE 1
1 / E1.1	DETAIL TAG. REFER TO DETAIL 1 ON SHEET NUMBER E1.1

ABBREVIATIONS

A AMP	AMPERE
AFF	ABOVE FINISHED FLOOR
AP	ACCESS POINT
BRKR	BREAKER
C	CONDUIT, CLOCK
CATV	CABLE TELEVISION
CBC	CALIFORNIA BUILDING CODE
CCTV	CLOSED CIRCUIT TELEVISION
CEC	CALIFORNIA ELECTRIC CODE
CKT	CIRCUIT
CO	CONDUIT ONLY WITH PULL ROPE
CPS	CURRICULUM AND PRESENTATION SYSTEM
CSC	CLOCK/SPEAKER CABINET
(E)	EXISTING
FU	FUSE
(G)	GROUND, GUARD
IDF	INTERMEDIATE DISTRIBUTION FRAME
MAX	MAXIMUM
MDF	MAIN DISTRIBUTION FRAME
MIN	MINIMUM
MPOE	MAIN POINT OF ENTRY
MSTC	MAIN SIGNAL TELEPHONE CABINET
MTB	MAIN TELEPHONE BOARD
NEC	NATIONAL ELECTRICAL CODE
NL	NIGHT LIGHT
NTS	NOT TO SCALE
O.C.	ON CENTER
PA	PUBLIC ADDRESS
PEU	PHOTOELECTRIC UNIT
PH, ø	PHASE
PNL	PANEL
(R)	RELOCATED
RECEPT.	RECEPTACLE
SAD	SEE ARCHITECTURAL DRAWINGS
STC	SATELLITE TERMINAL CABINET
TRANSF.	TRANSFORMER
TB	TELEPHONE BOARD
TC	TERMINAL CAN
TMGB	TELECOMMUNICATION MAIN GROUNDING BUSBAR
TYP	TYPICAL
UON	UNLESS OTHERWISE NOTED
V	VOLT
W	WATT
WG	WIRE GUARD
WP	WEATHERPROOF
XFMR	TRANSFORMER

DRAWING INDEX

E0.1 GENERAL NOTES, LEGEND, ABBREVIATIONS AND DRAWING INDEX
E0.2 CERTIFICATE OF COMPLIANCE TITLE 24 - INDOOR LIGHTING
E0.3 CERTIFICATE OF COMPLIANCE TITLE 24 - OUTDOOR LIGHTING
E1.1 DEMOLITION PLAN - ELECTRICAL
E2.1 ELECTRICAL PLAN - GYMNASIUM
E2.2 ELECTRICAL PLAN - CLASSROOMS
E2.3 ELECTRICAL SITE LIGHTING
E3.1 SCHEDULES AND DETAILS

MEP COMPONENT ANCHORAGE NOTES

ALL MECHANICAL, PLUMBING AND ELECTRICAL COMPONENTS SHALL BE ANCHORED AND INSTALLED PER THE DETAILS ON THE DSA APPROVED CONSTRUCTION DOCUMENTS. WHERE NO DETAIL IS INDICATED, THE FOLLOWING COMPONENTS SHALL BE ANCHORED OR BRACED TO MEET THE FORCE AND DISPLACEMENT REQUIREMENT PRESCRIBED IN THE 2016 CBC, SECTION 1616A.1.18 THROUGH 1616A.1.26 AND ASCE 7-10 CHAPTER 13, 26 AND 30.

1. ALL PERMANENT EQUIPMENT AND COMPONENTS.
2. TEMPORARY OR MOVABLE EQUIPMENT THAT IS PERMANENTLY ATTACHED (E.G. HARD WIRED) TO THE BUILDING UTILITY SERVICES SUCH AS ELECTRICITY, GAS OR WATER
3. MOVABLE EQUIPMENT WHICH IS STATIONED IN ONE PLACE FOR MORE THAN 8 HOURS AND HEAVIER THAN 400 POUNDS ARE REQUIRED TO BE ANCHORED WITH TEMPORARY ATTACHMENTS.

THE FOLLOWING MECHANICAL AND ELECTRICAL COMPONENTS SHALL BE POSITIVELY ATTACHED TO THE STRUCTURE BUT THE ATTACHMENT NEED NOT BE DETAILED ON THE PLANS. THESE COMPONENTS SHALL HAVE FLEXIBLE CONNECTIONS PROVIDED BETWEEN THE COMPONENT AND ASSOCIATED DUCTWORK, PIPING, AND CONDUIT.

A. COMPONENTS WEIGHING LESS THAN 400 POUNDS AND HAVE A CENTER OF MASS LOCATED 4 FEET OR LESS ABOVE THE ADJACENT FLOOR OR ROOF LEVEL THAT DIRECTLY SUPPORT THE COMPONENT.
B. COMPONENTS WEIGHING LESS THAN 20 POUNDS, OR IN THE CASE OF DISTRIBUTED SYSTEMS, LESS THAN 5 POUNDS PER FOOT, WHICH ARE SUSPENDED FROM A ROOF OR FLOOR OR HUNG FROM A WALL.

FOR THOSE ELEMENTS THAT DO NOT REQUIRE DETAILS ON THE APPROVED DRAWINGS, THE INSTALLATION SHALL BE SUBJECT TO THE APPROVAL OF THE STRUCTURAL ENGINEER AND THE DSA DISTRICT STRUCTURAL ENGINEER. THE PROJECT INSPECTOR WILL VERIFY THAT ALL COMPONENTS AND EQUIPMENT HAVE BEEN ANCHORED IN ACCORDANCE WITH ABOVE REQUIREMENTS.

PIPING, DUCTWORK, AND ELECTRICAL DISTRIBUTION SYSTEM BRACING NOTE:

PIPING, DUCTWORK, AND ELECTRICAL DISTRIBUTION SYSTEMS SHALL BE BRACED TO COMPLY WITH THE FORCES AND DISPLACEMENT PRESCRIBED IN ASCE 7-10 SECTION 13.3 AS DEFINED IN ASCE 7-10 SECTION 13.6.5.6, 13.6.7, 13.6.8 AND 2016 CBC, SECTIONS 1616A.1.23, 1616A.1.24, 1616A.1.25 AND 1616A.1.26.

THE METHOD OF SHOWING BRACING AND ATTACHMENT TO THE STRUCTURE FOR THE IDENTIFIED DISTRIBUTION SYSTEM ARE AS NOTED BELOW. WHEN BRACING AND ATTACHMENTS ARE BASED ON A PREAPPROVED INSTALLATION GUIDE (e.g., SMACNA OR OSHPD OPM), COPIES OF THE BRACING SYSTEM INSTALLATION GUIDE OR MANUAL SHALL BE AVAILABLE ON THE JOBSITE PRIOR TO THE START AND DURING THE HANGING AND BRACING OF THE DISTRIBUTION SYSTEMS.

MECHANICAL PIPING (MP), MECHANICAL DUCTS (MD), PLUMBING PIPING (PP), ELECTRICAL DISTRIBUTION SYSTEMS (E):

MP ☐ MD ☐ PP ☐ E ☒
OPTION 1: DETAILED ON THE APPROVED DWGS WITH PROJECT SPECIFIC NOTES AND DETAILS

MP ☐ MD ☐ PP ☐ E ☒
OPTION 2: SHALL COMPLY WITH THE APPLICABLE OSHPD PRE-APPROVED (OPM#); (I.E. OPM # 0043-13 MASON INDUSTRIES INC., AND OPM # 0203-13 M.W. SAUSSE & CO. INC.)

MP ☐ MD ☐ PP ☐
OPTION 3: SHALL COMPLY WITH THE SMACNA SEISMIC RESTRAINT MANUAL, OSHPD EDITION (2009), INCLUDING ANY ADDENDA. FASTENERS AND OTHER ATTACHMENTS NOT SPECIFICALLY IDENTIFIED IN THE SMACNA SEISMIC RESTRAINT MANUAL, OSHPD EDITION, ARE DETAILED ON THE APPROVED DRAWINGS WITH PROJECT SPECIFIC NOTES AND DETAILS. THE DETAILS SHALL ACCOUNT FOR THE APPLICABLE SEISMIC HAZARD LEVEL AND CONNECTION CONNECTION LEVEL FOR THE PROJECT AND CONDITIONS.

LIST OF APPLICABLE CODES

1. 2019 CALIFORNIA BUILDING STANDARDS ADMINISTRATIVE CODE (PART 1, TITLE 24, CCR)
2. 2019 CALIFORNIA BUILDING CODE (CBC), VOLUMES 1 & 2 (PART 2, TITLE 24, CCR)
3. 2019 CALIFORNIA ELECTRICAL CODE (PART 3, TITLE 24, CCR)
4. 2019 CALIFORNIA MECHANICAL CODE (PART 4, TITLE 24, CCR)
5. 2019 CALIFORNIA PLUMBING CODE (PART 5, TITLE 24, CCR)
6. 2019 CALIFORNIA ENERGY CODE (PART 6, TITLE 24, CCR)
7. 2019 CALIFORNIA FIRE CODE (PART 9, TITLE 24, CCR)
8. 2019 CALIFORNIA REFERENCE STANDARDS CODE (PART 12, TITLE 24, CCR)
9. NFPA 13, 2019 EDITION, THE INSTALLATION OF AUTOMATIC SPRINKLER SYSTEMS, AS AMENDED
10. NFPA 14, 2019 EDITION, THE INSTALLATION OF STANDPIPE, PRIVATE HYDRANT AND HOSE SYSTEMS
11. NFPA 24, 2019 EDITION, THE INSTALLATION OF PRIVATE FIRE SERVICE MAINS AND THEIR APPURTENANCES
12. NFPA 72, 2019 EDITION, NATIONAL FIRE ALARM CODE, AS AMENDED

FIRE ALARM NOTES

1. THERE IS NO FIRE ALARM WORK IN THIS PROJECT.
2. THERE IS NO GAS BURNING MECHANICAL EQUIPMENT IN THIS PROJECT.
3. FIRE ALARM UPGRADE WAS DONE IN THE PREVIOUS PROJECT DATED FEBRUARY 11, 2005 UNDER DSA APPLICATION NUMBER 106489.

310 Nova Albion Way
San Rafael, CA 94903 415.492.3200

Terra Linda High School Modernization

310 Nova Albion Way
San Rafael, CA 94903
415.492.3200

Date	Issued For
1/22/2020	DSA Submittal

REGISTERED PROFESSIONAL ENGINEER
KENNETH S. NGAI
No. 11537
Exp. 6/30/21
ELECT.
STATE OF CALIFORNIA

Alliance Engineering Consultants, Inc.
4701 Patrick Henry Drive, Bldg. 10
Santa Clara, CA 95054
phone (408) 970-9888
fax (408) 970-9316
www.aec-engineers.com

PROJECT NO. 101-20-02

HED
417 Montgomery Street
Suite 400
San Francisco, California
94104 USA
(415) 981-2345
WWW.HED.DESIGN

© 2019

GENERAL NOTES, LEGEND, ABBREVIATIONS & DRAWING INDEX

E0.1

STATE OF CALIFORNIA
INDOOR LIGHTING
CEC-NRCC-LTI-01-E (Revised 04/16) CALIFORNIA ENERGY COMMISSION

CERTIFICATE OF COMPLIANCE	NRCC-LTI-01-E
Indoor Lighting	(Page 1 of 6)
Project Name: TERRA LINDA HS - MODERNIZATION	Date Prepared: 1/16/2020

A. General Information

Climate Zone: 4	Conditioned Floor Area: 2,123					
	Unconditioned Floor Area: 0					
Building Type:	☑	Nonresidential	☐	High-Rise Residential	☐	Hotel/Motel
☐ Schools	☐	Relocatable Public Schools	☑	Conditioned Spaces	☐	Unconditioned Spaces
Phase of Construction:	☐	New Construction	☐	Addition	☑	Alteration
Method of Compliance:	☑	Complete Building	☐	Area Category	☐	Tailored
Project Address: 310 NOVA ALBION WAY						

B. Lighting Compliance Documents (select yes for each document included)

For detailed instructions on the use of this and all Energy Efficiency Standards compliance documents, refer to the Nonresidential Manual published by the California Energy Commission.

YES	NO	COMP. DOC.	TITLE
☑	☐	NRCC-LTI-01-E	Certificate of Compliance. All Pages required on plans for all submittals.
☑	☐	NRCC-LTI-02-E	Lighting Controls, Certificate of Compliance, and PAF Calculation. All Pages required on plans for all submittals.
☑	☐	NRCC-LTI-03-E	Indoor Lighting Power Allowance
☐	☑	NRCC-LTI-04-E	Tailored Method Worksheets
☐	☑	NRCC-LTI-05-E	Line Voltage Track Lighting Worksheets
☐	☐	NRCC-LTI-06-E	Indoor Lighting Existing Conditions

CA Building Energy Efficiency Standards - 2016 Nonresidential Compliance April 2016

STATE OF CALIFORNIA
INDOOR LIGHTING
CEC-NRCC-LTI-01-E (Revised 04/16) CALIFORNIA ENERGY COMMISSION

CERTIFICATE OF COMPLIANCE	NRCC-LTI-01-E
Indoor Lighting	(Page 2 of 6)
Project Name: TERRA LINDA HS - MODERNIZATION	Date Prepared: 1/16/2020

C. Summary of Allowed Lighting Power

Conditioned and Unconditioned space Lighting must not be combined for compliance

	Indoor Lighting Power for Conditioned Spaces		Watts	Indoor Lighting Power for Unconditioned Spaces		Watts
01	**Installed** Lighting NRCC-LTI-01-E, Table H, page 5	+	1,200	**Installed** Lighting NRCC-LTI-01-E, Table H, page 5	+	0
02	Portable Only for Offices NRCC-LTI-01-E, Table G, page 4	+				
03	Minus Lighting Control Credits NRCC-LTI-02-E, page 2	-	0	Minus Lighting Control Credits NRCC-LTI-02-E, page 2	-	0
04	Adjusted **Installed** Lighting Power (row 1 plus row 2 minus row 3)	=	1,200	Adjusted **Installed** Lighting Power (row 1 minus row 3)	=	0
	Complies ONLY if **Installed ≤ Allowed** (Box 04 < Box 05)			Complies ONLY if **Installed ≤ Allowed** (Box 04 < Box 05)		
05	**Allowed** Lighting Power Conditioned NRCC-LTI-03-E, page 1 Alterations with replacement luminaires that have at least 50/35% lower power compared to the original existing luminaires, may instead use the allowed wattage from NRCC-LTI-06, page 2		2,335	**Allowed** Lighting Power Unconditioned NRCC-LTI-03-E, page 1 Alterations with replacement luminaires that have at least 50/35% lower power compared to the original existing luminaires, may instead use the allowed wattage from NRCC-LTI-06, page 2		0

D. Declaration of Required Certificates of Installation

Declare by selecting yes for all of the Certificates that will be submitted. (Retain copies and verify forms are completed and signed.)

YES	NO	Compliance Document/Title	
☑	☐	NRCI-LTI-01-E - Must be submitted for all buildings	☐ Field Inspector
☐	☑	NRCI-LTI-02-E - Must be submitted for a lighting control system, or for an Energy Management Control System (EMCS), to be recognized for compliance.	☐ Field Inspector
☐	☑	NRCI-LTI-03-E - Must be submitted for a line-voltage track lighting integral current limiter, or for a supplementary overcurrent protection panel used to energize only line-voltage track lighting, to be recognized for compliance.	☐ Field Inspector
☐	☑	NRCI-LTI-04-E - Must be submitted for two interlocked systems serving an auditorium, a convention center, a conference room, a multipurpose room, or a theater to be recognized for compliance.	☐ Field Inspector
☐	☑	NRCI-LTI-05-E - Must be submitted for a Power Adjustment Factor (PAF) to be recognized for compliance.	☐ Field Inspector
☐	☑	NRCI-LTI-06-E - Must be submitted for additional wattage installed in a video conferencing studio to be recognized for compliance.	☐ Field Inspector

CA Building Energy Efficiency Standards - 2016 Nonresidential Compliance April 2016

STATE OF CALIFORNIA
INDOOR LIGHTING
CEC-NRCC-LTI-01-E (Revised 04/16) CALIFORNIA ENERGY COMMISSION

CERTIFICATE OF COMPLIANCE	NRCC-LTI-01-E
Indoor Lighting	(Page 3 of 6)
Project Name: TERRA LINDA HS - MODERNIZATION	Date Prepared: 1/16/2020

E. Declaration of Required Certificates of Acceptance

Declare by selecting yes for all of the Certificates that will be submitted. (Retain copies and verify forms are completed and signed.)

YES	NO	Compliance Document/Title	
☑	☐	NRCA-LTI-02-A - Must be submitted for occupancy sensors and automatic time switch controls.	☐ Field Inspector
☐	☑	NRCA-LTI-03-A - Must be submitted for automatic daylight controls.	☐ Field Inspector
☐	☑	NRCA-LTI-04-A - Must be submitted for demand responsive lighting controls.	☐ Field Inspector
☐	☑	NRCA-LTI-05-A – Must be submitted for institutional tuning power adjustment factor (PAF).	☐ Field Inspector

A Separate Lighting Schedule Must Be Filled Out for Conditioned and Unconditioned Spaces. Installed Lighting Power listed on this Lighting Schedule is only for:
☐ **CONDITIONED SPACE** ☐ **UNCONDITIONED SPACE**

F. Indoor Lighting Schedule and Field Inspection Energy Checklist

- ☐ The actual indoor lighting power listed on the next 2 pages includes all installed permanent and planned portable lighting systems.
- ☐ When Complete Building Method is used for compliance, list each different type of luminaire on separate lines.
- ☐ When Area Category Method or Tailored Method is used for compliance, list each different type of luminaire by each different function area on separate lines
- ☐ Also include track lighting in schedule, and submit the track lighting compliance document (NRCC-LTI-05-E) when line-voltage track lighting is installed.

CA Building Energy Efficiency Standards - 2016 Nonresidential Compliance April 2016

STATE OF CALIFORNIA
INDOOR LIGHTING
CEC-NRCC-LTI-01-E (Revised 04/16) CALIFORNIA ENERGY COMMISSION

CERTIFICATE OF COMPLIANCE	NRCC-LTI-01-E
Indoor Lighting	(Page 5 of 6)
Project Name: TERRA LINDA HS - MODERNIZATION	Date Prepared: 1/16/2020

A Separate Lighting Schedule Must Be Filled Out for Conditioned and Unconditioned Spaces. Installed Lighting Power listed on this Lighting Schedule is only for:
☑ **CONDITIONED SPACE** ☐ **UNCONDITIONED SPACE**

H. Indoor Lighting Schedule and Field Inspection Energy Checklist

Luminaire Schedule		Installed Watts					Location	Field Inspector [1]	
01	02	03	04		05	06	07	08	
Name or Item Tag	Complete Luminaire Description (i.e, 3 lamp fluorescent troffer, F32T8, one dimmable electronic ballast)	Watts per Luminaire	How wattage was determined: CEC Default from NA8	According to §130.0(c)	Number Luminaires	Total Installed Watts in this area (H03 x H05)	Primary Function area in which these luminaires are installed	Pass	Fail
A	50W LED	50.0	☑	☐	24	1,200	Comp Bldg Classroom	☐	☐
			☐	☐				☐	☐
			☐	☐				☐	☐
			☐	☐				☐	☐
			☐	☐				☐	☐
			☐	☐				☐	☐
			☐	☐				☐	☐
			☐	☐				☐	☐
			☐	☐				☐	☐
INSTALLED WATTS PAGE TOTAL:						1,200	Enter sum total of all pages into NRCC-LTI-01-E; Page 2		

CA Building Energy Efficiency Standards - 2016 Nonresidential Compliance April 2016

STATE OF CALIFORNIA
INDOOR LIGHTING
CEC-NRCC-LTI-01-E (Revised 04/16) CALIFORNIA ENERGY COMMISSION

CERTIFICATE OF COMPLIANCE	NRCC-LTI-01-E
Indoor Lighting	(Page 6 of 6)
Project Name: TERRA LINDA HS - MODERNIZATION	Date Prepared: 1/16/2020

DOCUMENTATION AUTHOR'S DECLARATION STATEMENT

1. I certify that this Certificate of Compliance documentation is accurate and complete.

Documentation Author Name: Doan Trang Hoang	Documentation Author Signature:
Company: Alliance Engineering Consultants, Inc	Signature Date: 1/16/2020
Address: 4701 Patrick Henry Drive, BLDG 10	CEA Certification Identification (if applicable):
City/State/Zip: ,Santa Clara, CA 95054	Phone: (408) 970-9888

RESPONSIBLE PERSON'S DECLARATION STATEMENT

I certify the following under penalty of perjury, under the laws of the State of California:

1. The information provided on this Certificate of Compliance is true and correct.
2. I am eligible under Division 3 of the Business and Professions Code to accept responsibility for the building design or system design identified on this Certificate of Compliance (responsible designer).
3. The energy features and performance specifications, materials, components, and manufactured devices for the building design or system design identified on this Certificate of Compliance conform to the requirements of Title 24, Part 1 and Part 6 of the California Code of Regulations.
4. The building design features or system design features identified on this Certificate of Compliance are consistent with the information provided on other applicable compliance documents, worksheets, calculations, plans and specifications submitted to the enforcement agency for approval with this building permit application.
5. I will ensure that a completed signed copy of this Certificate of Compliance shall be made available with the building permit(s) issued for the building, and made available to the enforcement agency for all applicable inspections. I understand that a completed signed copy of this Certificate of Compliance is required to be included with the documentation the builder provides to the building owner at occupancy.

Responsible Designer Name: KEN NGAI	Responsible Designer Signature:
Company: ALLIANCE ENGINEERING CONSULTANT , INC.	Date Signed: 1/16/2020
Address: 4701 PATRICK HENRY DRIVE	License: E11537
City/State/Zip: SANTA CLARA, CA 95054	Phone: 408-970-9888

CA Building Energy Efficiency Standards - 2016 Nonresidential Compliance April 2016

STATE OF CALIFORNIA
INDOOR LIGHTING – LIGHTING CONTROLS
CEC-NRCC-LTI-02-E (Revised 01/16) CALIFORNIA ENERGY COMMISSION

CERTIFICATE OF COMPLIANCE	NRCC-LTI-02-E
Indoor Lighting - Lighting Controls	(Page 1 of 3)
Project Name: TERRA LINDA HS - MODERNIZATION	Date Prepared: 1/16/2020

A. Mandatory Lighting Control Declaration Statements (Indicate if the measure applies by checking yes or no below.)

YES	NO	Control Requirements
☐	☑	Lighting shall be controlled by self-contained lighting control devices which are certified to the Energy Commission according to the Title 20 Appliance Efficiency Regulations in accordance with Section 110.9.
☐	☑	Lighting shall be controlled by a lighting control system or energy management control system in accordance with §110.9. An Installation Certificate shall be submitted in accordance with Section 130.4(b).
☐	☑	One or more Track Lighting Integral Current Limiters shall be installed which have been certified to the Energy Commission in accordance with §110.9 and §130.0. Additionally, an Installation Certificate shall be submitted in accordance with Section 130.4(b).
☐	☑	A Track Lighting Supplementary Overcurrent Protection Panel shall be installed in accordance with Section 110.9 and Section 130.0. Additionally, an Installation Certificate shall be installed in accordance with Section 130.4(b).
☑	☐	All lighting controls and equipment shall comply with the applicable requirements in §110.9 and shall be installed in accordance with the manufacturer's instructions in accordance with Section 130.1.
☐	☑	All luminaires shall be functionally controlled with manually switched ON and OFF lighting controls in accordance with Section 130.1(a).
☑	☐	General lighting shall be separately controlled from all other lighting systems in an area. Floor and wall display, window display, case display, ornamental, and special effects lighting shall each be separately controlled on circuits that are 20 amps or less. When track lighting is used, general, display, ornamental, and special effects lighting shall each be separately controlled; in accordance with Section 130.1(a)4.
☑	☐	The general lighting of any enclosed area 100 square feet or larger, with a connected lighting load that exceeds 0.5 watts per square foot shall meet the multi-level lighting control requirements in accordance with Section 130.1(b).
☑	☐	All installed indoor lighting shall be equipped with controls that meet the applicable Shut-OFF control requirements in Section 130.1(c).
☐	☑	Lighting in all Daylit Zones shall be controlled in accordance with the requirements in Section 130.1(d) and daylit zones are shown on the plans.
☐	☑	Lighting power in buildings larger than 10,000 square feet shall be capable of being automatically reduced in response to a Demand Responsive Signal in accordance with Section 130.1(e).
☑	☐	Before an occupancy permit is granted for a newly constructed building or area, or a new lighting system serving a building, area, or site is operated for normal use, indoor lighting controls serving the building, area, or site shall be certified as meeting the Acceptance Requirements for Code Compliance in accordance with Section 130.4.(a). The controls required to meet the Acceptance Requirements include automatic daylight controls, automatic shut-OFF controls, and demand responsive controls.

CA Building Energy Efficiency Standards - 2016 Nonresidential Compliance January 2016

STATE OF CALIFORNIA
INDOOR LIGHTING – LIGHTING CONTROLS
CEC-NRCC-LTI-02-E (Revised 01/16) CALIFORNIA ENERGY COMMISSION

CERTIFICATE OF COMPLIANCE	NRCC-LTI-02-E
Indoor Lighting - Lighting Controls	(Page 2 of 3)
Project Name: TERRA LINDA HS - MODERNIZATION	Date Prepared: 1/16/2020

A separate document must be filled out for Conditioned and Unconditioned Spaces. This page is used only for the following:
☑ CONDITIONED SPACES ☐ UNCONDITIONED SPACES

B. Mandatory and Prescriptive Indoor Lighting Control Schedule, PAF Calculation, and Field Inspection Checklist

Lighting Control Schedule			Standards Complying With [1] (✓ all that apply, or enter 'E' if Exempted)							PAF Credit Calculation [2]: Watts of Controlled Lighting	PAF	Control Credit (K x L)	✓ if Acceptance Test Required	Field Inspector	
01	02	03	04	05	06	07	08	09	10	11	12	13	14	15	
Location in Building	Type/Description of Lighting Control (i.e.: occupancy sensor, automatic time switch, dimmer, automatic daylight, etc...)	# of Units	§130.1(a)	§130.0(b)	§130.1(c)	§130.1(d)	§130.1(e)	§140.6(a)2	§140.6(d)					Pass	Fail
CLASSROOMS	Occupancy Sensor	2	☐	☐	☑	☐	☐	☐	☐				✓	☐	☐
CLASSROOMS	Multi Level	2	☐	☑	☐	☐	☐	☐	☐				✓	☐	☐
			☐	☐	☐	☐	☐	☐	☐					☐	☐
			☐	☐	☐	☐	☐	☐	☐					☐	☐
			☐	☐	☐	☐	☐	☐	☐					☐	☐
			☐	☐	☐	☐	☐	☐	☐					☐	☐
Control Credit PAGE TOTAL (Sum of Column 13):												0			
IF MULTIPLE PAGES ARE USED, ENTER SUM TOTAL OF Control Credit for all pages HERE (Sum of all Column 13):												0			
												Enter Control Credit total into NRCC-LTI-01-E; Page 1.			

1. §130.1(a) = Manual area controls; §130.0(b) = Multi Level; §130.1(c) = Auto Shut-Off; §130.1(d) = Mandatory Daylight; §130.1(e) = Demand Responsive; §140.6(d) = Additional lighting controls installed to earn a PAF; §140.6(d) = Prescriptive Secondary Sidelit Daylight Controls.
2. Check Table 140.6-A for correct Factor. PAFs shall not be traded between conditioned and unconditioned spaces. As a condition to earn a PAF, an Installation Certificate is also required to be filled out, signed, and submitted.

CA Building Energy Efficiency Standards - 2016 Nonresidential Compliance January 2016

STATE OF CALIFORNIA
INDOOR LIGHTING – LIGHTING CONTROLS
CEC-NRCC-LTI-02-E (Revised 01/16) CALIFORNIA ENERGY COMMISSION

CERTIFICATE OF COMPLIANCE	NRCC-LTI-02-E
Indoor Lighting - Lighting Controls	(Page 3 of 3)
Project Name: TERRA LINDA HS - MODERNIZATION	Date Prepared: 1/16/2020

DOCUMENTATION AUTHOR'S DECLARATION STATEMENT

1. I certify that this Certificate of Compliance documentation is accurate and complete.

Documentation Author Name: Doan Trang Hoang	Documentation Author Signature:
Company: Alliance Engineering Consultants, Inc	Signature Date: 1/16/2020
Address: 4701 Patrick Henry Drive, BLDG 10	CEA Certification Identification (if applicable):
City/State/Zip: Santa Clara, CA 95054	Phone: (408) 970-9888

RESPONSIBLE PERSON'S DECLARATION STATEMENT

I certify the following under penalty of perjury, under the laws of the State of California:

1. The information provided on this Certificate of Compliance is true and correct.
2. I am eligible under Division 3 of the Business and Professions Code to accept responsibility for the building design or system design identified on this Certificate of Compliance (responsible designer).
3. The energy features and performance specifications, materials, components, and manufactured devices for the building design or system design identified on this Certificate of Compliance conform to the requirements of Title 24, Part 1 and Part 6 of the California Code of Regulations.
4. The building design features or system design features identified on this Certificate of Compliance are consistent with the information provided on other applicable compliance documents, worksheets, calculations, plans and specifications submitted to the enforcement agency for approval with this building permit application.
5. I will ensure that a completed signed copy of this Certificate of Compliance shall be made available with the building permit(s) issued for the building, and made available to the enforcement agency for all applicable inspections. I understand that a completed signed copy of this Certificate of Compliance is required to be included with the documentation the builder provides to the building owner at occupancy.

Responsible Designer Name: KEN NGAI	Responsible Designer Signature:
Company: ALLIANCE ENGINEERING CONSULTANT , INC.	Date Signed: 1/16/2020
Address: 4701 PATRICK HENRY DRIVE	License: E11537
City/State/Zip: SANTA CLARA, CA 95054	Phone: 408-970-9888

CA Building Energy Efficiency Standards - 2016 Nonresidential Compliance January 2016

STATE OF CALIFORNIA
INDOOR LIGHTING POWER ALLOWANCE
CEC-NRCC-LTI-03-E (Revised 04/16) CALIFORNIA ENERGY COMMISSION

CERTIFICATE OF COMPLIANCE	NRCC-LTI-03-E
Certificate of Compliance - Indoor Lighting Power Allowance	(Page 1 of 4)
Project Name: TERRA LINDA HS - MODERNIZATION	Date Prepared: 1/16/2020

A separate page must be filled out for Conditioned and Unconditioned Spaces. This page is only for:
☑ CONDITIONED spaces ☐ UNCONDITIONED spaces

A. SUMMARY TOTALS OF LIGHTING POWER ALLOWANCES

- ☐ If using Complete Building Method for compliance, use only the total in column (a) as total allowed building watts.
- ☐ If using Area Category Method, Tailored Method, or a combination of Area Category and Tailored Method for compliance, use only the total in column (b) as the total allowed building watts

	(a)		(b)
01 Complete Building Method Allowed Watts. Documented in section B of NRCC-LTI-03-E (below on this page)	2,335		
02 Area Category Method Allowed Watts. Documented in section C-1 of NRCC-LTI-03-E (below on this page)			
03 Tailored Method Allowed Watts. Documented in section A of NRCC-LTI-04-E			
TOTAL ALLOWED BUILDING WATTS. Enter number into correct cell on NRCC-LTI-01, Page 2, Row 1	2,335		

☐ Check here if building contains both conditioned and unconditioned areas.

B. COMPLETE BUILDING METHOD LIGHTING POWER ALLOWANCE

01	02		03		04
TYPE OF BUILDING (From §140.6 Table 140.6-B)	WATTS PER ft^2	X	COMPLETE BLDG. AREA	=	ALLOWED WATTS
Comp Bldg Classroom	1.10		2,123		2,335
Total Area:					
Total Watts. Enter Total Watts into section A, row 1 (Above on this page)					

C -1 AREA CATEGORY METHOD TOTAL LIGHTING POWER ALLOWANCES	Watts
Total from section C-2.	
Total from section C-3.	
Total Watts. Enter Total Watts into section A, row 2 (Above on this page).	
For Alterations Only – Reduced lighting power option (Total Allowed Watts x 0.85). Enter this value into section A, row 2 if using this option.	

CA Building Energy Efficiency Standards - 2016 Nonresidential Compliance April 2016

STATE OF CALIFORNIA
INDOOR LIGHTING POWER ALLOWANCE
CEC-NRCC-LTI-03-E (Revised 04/16) CALIFORNIA ENERGY COMMISSION

CERTIFICATE OF COMPLIANCE	NRCC-LTI-03-E
Certificate of Compliance - Indoor Lighting Power Allowance	(Page 4 of 4)
Project Name: TERRA LINDA HS - MODERNIZATION	Date Prepared: 1/16/2020

DOCUMENTATION AUTHOR'S DECLARATION STATEMENT

1. I certify that this Certificate of Compliance documentation is accurate and complete.

Documentation Author Name: Doan Trang Hoang	Documentation Author Signature:
Company: Alliance Engineering Consultants, Inc	Signature Date: 1/16/2020
Address: 4701 Patrick Henry Drive, BLDG 10	CEA Certification Identification (if applicable):
City/State/Zip: Santa Clara, CA 95054	Phone: (408) 970-9888

RESPONSIBLE PERSON'S DECLARATION STATEMENT

I certify the following under penalty of perjury, under the laws of the State of California:

1. The information provided on this Certificate of Compliance is true and correct.
2. I am eligible under Division 3 of the Business and Professions Code to accept responsibility for the building design or system design identified on this Certificate of Compliance (responsible designer).
3. The energy features and performance specifications, materials, components, and manufactured devices for the building design or system design identified on this Certificate of Compliance conform to the requirements of Title 24, Part 1 and Part 6 of the California Code of Regulations.
4. The building design features or system design features identified on this Certificate of Compliance are consistent with the information provided on other applicable compliance documents, worksheets, calculations, plans and specifications submitted to the enforcement agency for approval with this building permit application.
5. I will ensure that a completed signed copy of this Certificate of Compliance shall be made available with the building permit(s) issued for the building, and made available to the enforcement agency for all applicable inspections. I understand that a completed signed copy of this Certificate of Compliance is required to be included with the documentation the builder provides to the building owner at occupancy.

Responsible Designer Name: KEN NGAI	Responsible Designer Signature:
Company: ALLIANCE ENGINEERING CONSULTANT , INC.	Date Signed: 1/16/2020
Address: 4701 PATRICK HENRY DRIVE	License: E11537
City/State/Zip: SANTA CLARA, CA 95054	Phone: 408-970-9888

CA Building Energy Efficiency Standards - 2016 Nonresidential Compliance April 2016

310 Nova Albion Way
San Rafael, CA 94903 415.492.3200

Terra Linda High School Modernization

310 Nova Albion Way
San Rafael, CA 94903
415.492.3200

Date	Issued For
1/22/2020	DSA Submittal

REGISTERED PROFESSIONAL ENGINEER
KENNETH S. NGAI
No. 11537
Exp. 6/30/21
ELECT.
STATE OF CALIFORNIA

Alliance Engineering Consultants, Inc.
4701 Patrick Henry Drive, Bldg. 10
Santa Clara, CA 95054
phone (408) 970-9888
fax (408) 970-9316
www.aec-engineers.com

PROJECT NO. 101-20-02

HED
417 Montgomery Street
Suite 400
San Francisco, California
94104 USA
(415) 981-2345
WWW.HED.DESIGN

© 2019

CERTIFICATE OF COMPLIANCE
TITLE 24
INDOOR LIGHTING

E0.2

STATE OF CALIFORNIA
OUTDOOR LIGHTING
CEC-NRCC-LTO-01-E (Revised 04/16) CALIFORNIA ENERGY COMMISSION

CERTIFICATE OF COMPLIANCE	NRCC-LTO-01-E
Outdoor Lighting	(Page 1 of 4)
Project Name: TERRA LINDA HS - MODERNIZATION	Date Prepared:

A. General Information				
Project Address: 310 NOVA ALBION WAY SAN RAFAEL, CA 94903			Total Illuminated Hardscape Area: 0	
Phase of Construction:	☐ New Construction	☐ Addition	☐ Alteration	
Outdoor Lighting Zone (LZ)	☐ LZ-1	☐ LZ-2	☑ LZ-3	☐ LZ-4
I have confirmed with the AHJ which LZ applies to this site. For default lighting zone designations, see Title 24 Part 6, §10-114				

B. Lighting Compliance Documents (check box for each document included)		
For detailed instructions on the use of this and all Energy Efficiency Standards compliance documents, refer to the Nonresidential Manual published by the California Energy Commission.		
☑	NRCC-LTO-01-E	Certificate of Compliance
☑	NRCC-LTO-02-E	Outdoor Lighting Controls Certificate of Compliance
☑	NRCC-LTO-03-E	Outdoor Lighting Power Allowance Certificate of Compliance
☐	NRCC-LTO-04-E	Outdoor Lighting Existing Conditions Certificate of Compliance

C. Summary of Allowed Outdoor Lighting Power		Watts
01	**Sum Total ALLOWED** Outdoor Lighting Wattage from NRCC-LTO-03-E, page 1 Alterations with NO increase of connected lighting load may instead use the allowed wattage from NRCC-LTO-04, page 2.	145
	Complies ONLY if **Installed** (Box 02) ≤ **Allowed** (Box 01)	
02	**Sum Total INSTALLED** Outdoor Lighting Wattage from NRCC-LTO-01-E, page 3.	145

D. Declaration of Required Installation Certificates Declare by checking all Installation Certificates that will be submitted. (Retain copies and verify compliance documents are completed and signed.)	
☑ NRCI-LTO-01-E - Must be submitted for all buildings	☐ Field Inspector
☑ NRCI-LTO-02-E - Must be submitted for a lighting control system, or for an Energy Management Control System (EMCS), to be recognized for compliance.	☐ Field Inspector

E. Declaration of Required Certificates of Acceptance Declare by checking all of the Certificates of Acceptance that will be submitted. (Retain copies and verify compliance documents are completed and signed.)	
☑ NRCA-LTO-02-A - Must be submitted for outdoor lighting controls.	☐ Field Inspector

F. Schedule of Luminaires Exempt from the Outdoor Lighting Power Requirements in §140.7	
01	02
Name or Symbol	Description of exempt luminaire in accordance with the exemptions

STATE OF CALIFORNIA
OUTDOOR LIGHTING
CEC-NRCC-LTO-01-E (Revised 02/16) CALIFORNIA ENERGY COMMISSION

CERTIFICATE OF COMPLIANCE	NRCC-LTO-01-E
Outdoor Lighting	(Page 3 of 4)
Project Name: TERRA LINDA HS - MODERNIZATION	Date Prepared: 1/21/2020

I. Outdoor Lighting Schedule and Field Inspection Energy Checklist

Luminaire Schedule		Installed Watts					Location	Cutoff	Field Inspector	
01	02	03	04		05	06	07	08	09	
			How wattage was determined							
Name or Item Tag	Complete Luminaire Description	Watts per Luminaire	CEC Default from NA8	According to §130.0(c)	Number of Luminaires	Total Installed Watts in this area (3 x 5)	Primary Function area in which the luminaires are installed (Outdoor Lighting Zone)	BUG Rating	Pass	Fail
B	29W LED	29.0	☑	☐	5	145	Hardscape Ornamental	UH: n/a UL: n/a FVH: n/a BVH: n/a FH: n/a BH: n/a	☐	☐
			☐	☐				UH: UL: FVH: BVH: FH: BH:	☐	☐
			☐	☐				UH: UL: FVH: BVH: FH: BH:	☐	☐
					INSTALLED WATTS PAGE TOTAL:	145	Enter sum total of all pages (**Sum Total INSTALLED** Outdoor lighting wattage) into NRCC-LTO-01-E, page 1.	145		

STATE OF CALIFORNIA
OUTDOOR LIGHTING
CEC-NRCC-LTO-01-E (Revised 02/16) CALIFORNIA ENERGY COMMISSION

CERTIFICATE OF COMPLIANCE	NRCC-LTO-01-E
Outdoor Lighting	(Page 4 of 4)
Project Name: TERRA LINDA HS - MODERNIZATION	Date Prepared: 1/21/2020

DOCUMENTATION AUTHOR'S DECLARATION STATEMENT

1. I certify that this Certificate of Compliance documentation is accurate and complete.

Documentation Author Name: Doan Trang Hoang	Documentation Author Signature:
Company: Alliance Engineering Consultants, Inc	Signature Date: 1/21/2020
Address: 4701 Patrick Henry Drive, BLDG 10	CEA Certification Identification (if applicable):
City/State/Zip: Santa Clara, CA 95054	Phone: (408) 970-9888

RESPONSIBLE PERSON'S DECLARATION STATEMENT

I certify the following under penalty of perjury, under the laws of the State of California:
1. The information provided on this Certificate of Compliance is true and correct.
2. I am eligible under Division 3 of the Business and Professions Code to accept responsibility for the building design or system design identified on this Certificate of Compliance (responsible designer).
3. The energy features and performance specifications, materials, components, and manufactured devices for the building design or system design identified on this Certificate of Compliance conform to the requirements of Title 24, Part 1 and Part 6 of the California Code of Regulations.
4. The building design features or system design features identified on this Certificate of Compliance are consistent with the information provided on other applicable compliance documents, worksheets, calculations, plans and specifications submitted to the enforcement agency for approval with this building permit application.
5. I will ensure that a completed signed copy of this Certificate of Compliance shall be made available with the building permit(s) issued for the building, and made available to the enforcement agency for all applicable inspections. I understand that a completed signed copy of this Certificate of Compliance is required to be included with the documentation the builder provides to the building owner at occupancy.

Responsible Designer Name: KEN NGAI	Responsible Designer Signature:
Company: ALLIANCE ENGINEERING CONSULTANT, INC.	Date Signed: 1/21/2020
Address: 4701 PATRICK HENRY DRIVE	License: E11537
City/State/Zip: SANTA CLARA, CA 95054	Phone: 408-970-9888

STATE OF CALIFORNIA
OUTDOOR LIGHTING CONTROLS
CEC-NRCC-LTO-02-E (Revised 08/16) CALIFORNIA ENERGY COMMISSION

CERTIFICATE OF COMPLIANCE	NRCC-LTO-02-E
Outdoor Lighting Controls	(Page 1 of 3)
Project Name: TERRA LINDA HS - MODERNIZATION	Date Prepared: 1/21/2020

A. Mandatory Outdoor Lighting Control Declaration Statements

Check all that apply:
- ☐ Lighting shall be controlled by self-contained lighting control devices which are certified to the Energy Commission according to the Title 20 Appliance Efficiency Regulations in accordance with §110.9(a).
- ☐ Lighting shall be controlled by a lighting control system or energy management control system in accordance with §110.9. An Installation Certificate shall be submitted in accordance with §130.4(b).
- ☑ All lighting controls and equipment shall comply with the applicable requirements in §110.9 and shall be installed in accordance with the manufacturer's instructions in accordance with §130.0(d).
- ☐ Part-Night Outdoor Lighting Controls, as defined in Section 100.1(b), shall meet the requirements in Section 110.9(b)5.
- ☐ All outdoor incandescent luminaires rated over 100 watts, determined in accordance with Section 130.0(c), shall be controlled by a motion sensor.
- ☐ All outdoor luminaires rated for use with lamps greater than 150 lamp watts, determined in accordance with Section 130.0(c), shall comply with Uplight and Glare requirements in accordance with Section 130.2(b).
- ☑ All installed outdoor lighting shall be controlled by a photocontrol or outdoor astronomical time-switch control, or other control capable of automatically switching OFF in accordance with Section 130.2(c)1.
- ☑ All installed outdoor lighting shall be independently controlled from other electrical loads by an automatic scheduling control in accordance with Section 130.2(c)2.
- ☐ All installed outdoor lighting, where the bottom of the luminaire is mounted 24 feet or less above the ground, shall be controlled with automatic lighting controls in accordance with Section 130.2(c)3.
- ☐ For Outdoor Sales Frontage, an automatic lighting control shall be installed in accordance with Section 130.2(c)4.
- ☐ For Building Facade, Ornamental Hardscape and Outdoor Dining lighting, an automatic lighting control shall be installed in accordance with Section 130.2(c)5.
- ☑ Before an occupancy permit is granted for the newly constructed building or for the addition, or for any altered outdoor lighting, the outdoor lighting controls shall be certified as meeting the Acceptance Requirements for Code Compliance in accordance with §130.4.(a). Outdoor lighting controls shall comply with the applicable requirements of Section 130.2(c) and Reference Nonresidential Appendix NA7.8.

STATE OF CALIFORNIA
OUTDOOR LIGHTING CONTROLS
CEC-NRCC-LTO-02-E (Revised 08/16) CALIFORNIA ENERGY COMMISSION

CERTIFICATE OF COMPLIANCE	NRCC-LTO-02-E
Outdoor Lighting Controls	(Page 2 of 3)
Project Name: TERRA LINDA HS - MODERNIZATION	Date Prepared: 1/21/2020

B. Mandatory Outdoor Lighting Control Schedule and Field Inspection Checklist

Outdoor Lighting Control Schedule			Standards Complying With (✓ all that apply, or enter 'E' if Exempted)						✓ if Acceptance Test Required	Field Inspector	
01	02	03	04	05	06	07	08	09	10	11	
Location and Application of Luminaires Being Controlled	Type/ Description of Lighting Control (i.e. outdoor motion sensor, outdoor photocontrol, outdoor astronomical time-switch control, automatic scheduling control, part-night outdoor lighting control)	# of Units	§130.2(a)	§130.2(c)1	§130.2(c)2	§130.2(c)3	§130.2(c)4	§130.2(c)5		Pass	Fail
BOLLARD FIXTURES	Astronomical Time Switch	1		✓					☑	☐	☐
									☐	☐	☐
									☐	☐	☐
									☐	☐	☐
									☐	☐	☐
									☐	☐	☐
									☐	☐	☐
									☐	☐	☐
									☐	☐	☐
									☐	☐	☐
									☐	☐	☐
									☐	☐	☐
									☐	☐	☐
									☐	☐	☐
									☐	☐	☐
									☐	☐	☐
									☐	☐	☐

STATE OF CALIFORNIA
OUTDOOR LIGHTING CONTROLS
CEC-NRCC-LTO-02-E (Revised 08/16) CALIFORNIA ENERGY COMMISSION

CERTIFICATE OF COMPLIANCE	NRCC-LTO-02-E
Outdoor Lighting Controls	(Page 3 of 3)
Project Name: TERRA LINDA HS - MODERNIZATION	Date Prepared: 1/21/2020

DOCUMENTATION AUTHOR'S DECLARATION STATEMENT

1. I certify that this Certificate of Compliance documentation is accurate and complete.

Documentation Author Name: Doan Trang Hoang	Documentation Author Signature:
Company: Alliance Engineering Consultants, Inc	Signature Date: 1/21/2020
Address: 4701 Patrick Henry Drive, BLDG 10	CEA Certification Identification (if applicable):
City/State/Zip: , Santa Clara, CA 95054	Phone: (408) 970-9888

RESPONSIBLE PERSON'S DECLARATION STATEMENT

I certify the following under penalty of perjury, under the laws of the State of California:
1. The information provided on this Certificate of Compliance is true and correct.
2. I am eligible under Division 3 of the Business and Professions Code to accept responsibility for the building design or system design identified on this Certificate of Compliance (responsible designer).
3. The energy features and performance specifications, materials, components, and manufactured devices for the building design or system design identified on this Certificate of Compliance conform to the requirements of Title 24, Part 1 and Part 6 of the California Code of Regulations.
4. The building design features or system design features identified on this Certificate of Compliance are consistent with the information provided on other applicable compliance documents, worksheets, calculations, plans and specifications submitted to the enforcement agency for approval with this building permit application.
5. I will ensure that a completed signed copy of this Certificate of Compliance shall be made available with the building permit(s) issued for the building, and made available to the enforcement agency for all applicable inspections. I understand that a completed signed copy of this Certificate of Compliance is required to be included with the documentation the builder provides to the building owner at occupancy.

Responsible Designer Name: KEN NGAI	Responsible Designer Signature:
Company: ALLIANCE ENGINEERING CONSULTA	Date Signed: 1/21/2020
Address: 4701 PATRICK HENRY DRIVE	License: E11537
City/State/Zip: SANTA CLARA, CA 95054	Phone: 408-970-9888

STATE OF CALIFORNIA
OUTDOOR LIGHTING POWER ALLOWANCES
CEC-NRCC-LTO-03-E (Revised 01/16) CALIFORNIA ENERGY COMMISSION

CERTIFICATE OF COMPLIANCE	NRCC-LTO-03-E
Outdoor Lighting Power Allowances	(Page 1 of 4)
Project Name: TERRA LINDA HS - MODERNIZATION	Date Prepared: 1/21/2020

A. OUTDOOR LIGHTING POWER ALLOWANCE SUMMARY								
1. General Hardscape Lighting Power Allowance (Site Total from Section B of NRCC-LTO-03-E)								1. 0
2. Additional Specific "use it or lose it" Lighting Power Allowances listed in each of these cells shall be identical to total allowed watts determined in Section C-1 to C-4 of NRCC-LTO-03-E.								
PER APPLICATION from Section C-1		PER UNIT LENGTH (SALES FRONTAGE) from Section C-2		PER HARDSCAPE AREA (ORNAMENTAL LIGHTING) from Section C-3		PER SPECIFIC AREA from Section C-4.		
0	+	0	+	145	+	0	=	2. 145
3. **Sum Total ALLOWED** Outdoor Lighting Wattage (add rows 1 and 2)								3. 145

B. GENERAL HARDSCAPE LIGHTING POWER ALLOWANCE FROM TABLE 140.7-A

Area Wattage Allowance (AWA)				Linear Wattage Allowance (LWA)			Initial Wattage Allowance (IWA)	Total General Hardscape Lighting Allowance
01	02	03	04	05	06	07	08	09
Name of Area	Illuminated Hardscape Area	AWA Per Square Foot	AWA (B02 x B03)	Perimeter Length of General Hardscape	LPA per Linear Foot	LWA (B05 x B06)	IWA (Watts)	B04 + B07 + B08
							TOTAL	0

STATE OF CALIFORNIA
OUTDOOR LIGHTING POWER ALLOWANCES
CEC-NRCC-LTO-03-E (Revised 01/16) CALIFORNIA ENERGY COMMISSION

CERTIFICATE OF COMPLIANCE	NRCC-LTO-03-E
Outdoor Lighting Power Allowances	(Page 3 of 4)
Project Name: TERRA LINDA HS - MODERNIZATION	Date Prepared: 1/21/2020

C-3. WATTAGE ALLOWANCE PER SQUARE FOOT OF HARDSCAPE AREA (Ornamental Lighting) – Table 140.7-B

☐ Allowance for the total site illuminated hardscape area. Luminaires qualifying for this allowance shall be rated for 100 watts or less as determined in accordance with Section 130.0(c), and shall be post-top luminaires, lanterns, pendant luminaires, or chandeliers.

☐ If more than one luminaire type is used per location, use multiple rows for that location

01	02	03	04	05	06	07	08	09	10
	ALLOTTED WATTS			DESIGN WATTS					
Name of area for which ornamental allowance is claimed	Square Feet of Hardscape	Wattage Allowance per Square Foot	Allotted Watts (02 x 03)	Luminaire Code or Symbol	Luminaire Description	Luminaire Quantity	Watts per Luminaire	Design Watts (07 x 08)	Allowed Watts (smaller of 04 or 09)
Ext Task	8,939	0.040	358	B	29W LED	5	29.0	145	145
								Sum total allowance for ornamental lighting on the site:.	145

C-4. WATTAGE ALLOWANCE PER SQUARE FOOT OF SPECIFIC AREA - Table 140.7-B

☐ Allowances for Building Facades; Outdoor Sales Lots; Vehicle Service Station Hardscape; Vehicle Service Station Canopies; Sales Canopies; Non-sales Canopies; Tunnels; Guard Stations; Student Pick-up/Drop-off zone: Outdoor Dining; Special Security Lighting for Retail Parking and Pedestrian Hardscape.

☐ If more than one luminaire type is used per location, use multiple rows for that location

01	02	03	04	05	06	07	08	09	10
	ALLOTTED WATTS			DESIGN WATTS					
Name of Location for Which Allowance is Claimed	Illuminated Area of Application	Wattage Allowance per square Foot	Allotted Watts (02 x 03)	Luminaire Code or Symbol	Luminaire Description	Luminaire Quantity	Watts per Luminaire	Design Watts (07 x 08)	Allowed Watts (smaller of 04 or 09)
								Sum total allowance for specific area on the site:	0

STATE OF CALIFORNIA
OUTDOOR LIGHTING POWER ALLOWANCES
CEC-NRCC-LTO-03-E (Revised 01/16) CALIFORNIA ENERGY COMMISSION

CERTIFICATE OF COMPLIANCE	NRCC-LTO-03-E
Outdoor Lighting Power Allowances	(Page 4 of 4)
Project Name: TERRA LINDA HS - MODERNIZATION	Date Prepared: 1/21/2020

DOCUMENTATION AUTHOR'S DECLARATION STATEMENT

1. I certify that this Certificate of Compliance documentation is accurate and complete.

Documentation Author Name: Doan Trang Hoang	Documentation Author Signature:
Company: Alliance Engineering Consultants, Inc	Signature Date: 1/21/2020
Address: 4701 Patrick Henry Drive, BLDG 10	CEA Certification Identification (if applicable):
City/State/Zip: Santa Clara, CA 95054	Phone: (408) 970-9888

RESPONSIBLE PERSON'S DECLARATION STATEMENT

I certify the following under penalty of perjury, under the laws of the State of California:
1. The information provided on this Certificate of Compliance is true and correct.
2. I am eligible under Division 3 of the Business and Professions Code to accept responsibility for the building design or system design identified on this Certificate of Compliance (responsible designer).
3. The energy features and performance specifications, materials, components, and manufactured devices for the building design or system design identified on this Certificate of Compliance conform to the requirements of Title 24, Part 1 and Part 6 of the California Code of Regulations.
4. The building design features or system design features identified on this Certificate of Compliance are consistent with the information provided on other applicable compliance documents, worksheets, calculations, plans and specifications submitted to the enforcement agency for approval with this building permit application.
5. I will ensure that a completed signed copy of this Certificate of Compliance shall be made available with the building permit(s) issued for the building, and made available to the enforcement agency for all applicable inspections. I understand that a completed signed copy of this Certificate of Compliance is required to be included with the documentation the builder provides to the building owner at occupancy.

Responsible Designer Name: KEN NGAI	Responsible Designer Signature:
Company: ALLIANCE ENGINEERING CONSULTANT, INC.	Date Signed: 1/21/2020
Address: 4701 PATRICK HENRY DRIVE	License: E11537
City/State/Zip: SANTA CLARA, CA 95054	Phone: 408-970-9888

310 Nova Albion Way
San Rafael, CA 94903 415.492.3200

Terra Linda High School
Modernization

310 Nova Albion Way
San Rafael, CA 94903
415.492.3200

Date	Issued For
1/22/2020	DSA Submittal

REGISTERED PROFESSIONAL ENGINEER
KENNETH S. NGAI
No. 11537
Exp. 6/30/21
ELECT.
STATE OF CALIFORNIA

Alliance Engineering Consultants, Inc.
4701 Patrick Henry Drive, Bldg. 10
Santa Clara, CA 95054
phone (408) 970-9888
fax (408) 970-9316
www.aec-engineers.com

PROJECT NO. 101-20-02

HED
417 Montgomery Street
Suite 400
San Francisco, California
94104 USA

(415) 981-2345

WWW.HED.DESIGN

© 2019

CERTIFICATE OF COMPLIANCE
TITLE 24
OUTDOOR LIGHTING

E0.3

SHEET NOTES:

1. (E) ELECTRICAL ITEM TO REMAIN, MAINTAIN CIRCUITY CONTINUITY.
2. DISCONNECT AND REMOVE (E) LIGHT FIXTURE AND ASSOCIATED WIRES AND CONDUIT UP TO THE NEXT JUNCTION BOX WHICH IS TO REMAIN.
3. DISCONNECT AND REMOVE (E) LIGHT SWITCH.
4. COIL AND TAPE (E) HOT WIRES (CIRCUIT "DH5"-7) IN (E) JUNCTION BOX (FIELD VERIFY) FOR RECONNECTION IN THE (N) WORK.
5. (E) DUPLEX RECEPTACLES SHOWN IN THIS AREA ARE MOUNTED ABOVE COUNTER, ELECTRICAL CONTRACTOR SHALL RELOCATE IT DOWN TO A HEIGHT OF +15"A.F.F. TO BOTTOM OF PLATE. THIS WILL REQUIRE SPLICING WORK AND EXTENDING (N) CONDUIT AND WIRES TO THE (N) LOCATION. PROVIDE COVER PLATE TO SPACE WITH OPENING CREATED BY REMOVAL OF (E) DEVICE AND PATCH AND REPAIR (E) WALL AFFECTED BY DEMOLITION WORK.
6. DATA/TEL. OUTLET SHALL BE RELOCATED DOWN TO A HEIGHT OF +15" A.F.F. TO BOTTOM OF PLATE.

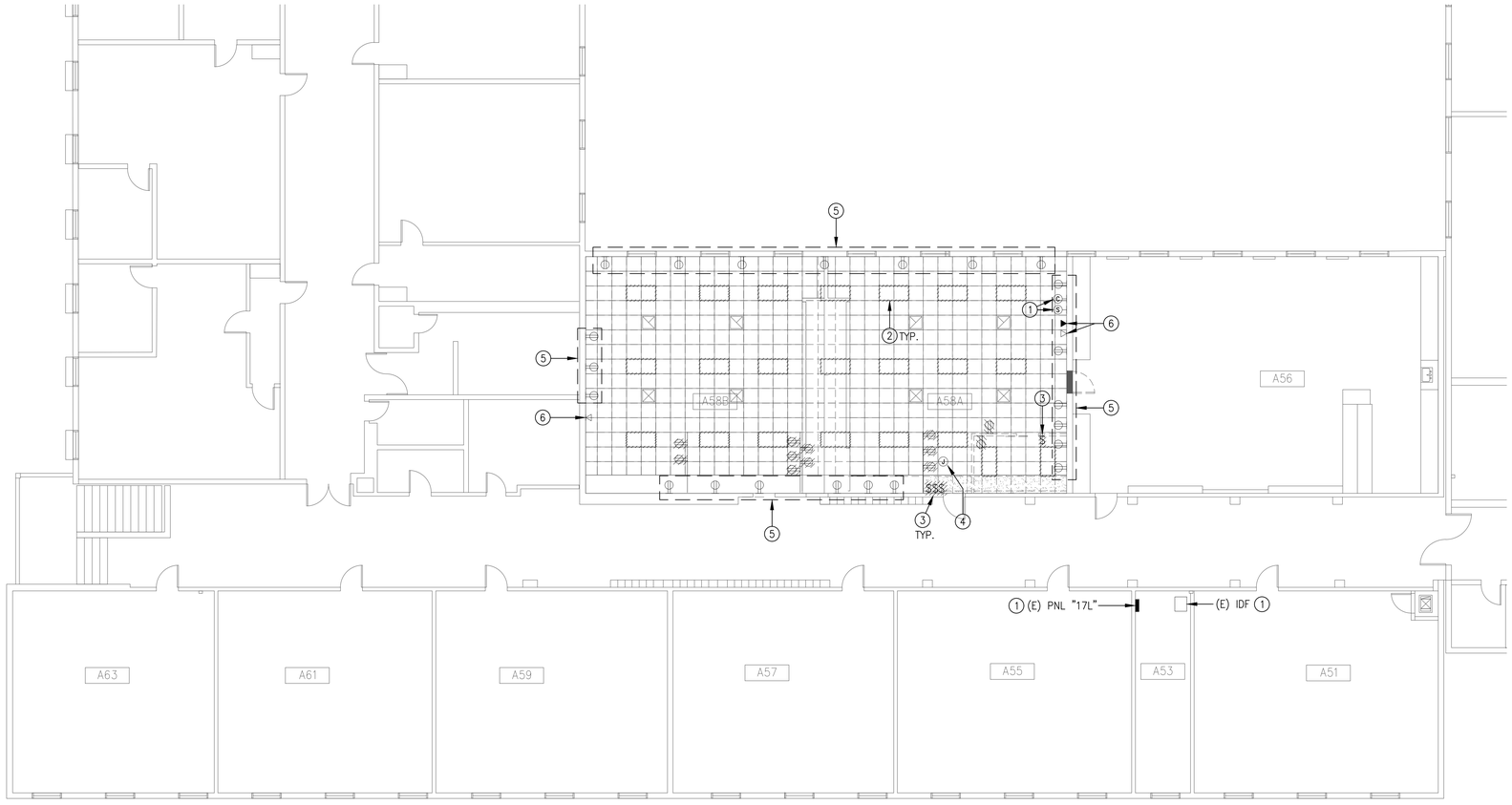

1 / E1.1 DEMOLITION PLAN – ELECTRICAL
SCALE: 1/8"= 1'-0"

SR
310 Nova Albion Way
San Rafael, CA 94903 415.492.3200

Terra Linda High School Modernization

310 Nova Albion Way
San Rafael, CA 94903
415.492.3200

Date	Issued For
1/22/2020	DSA Submittal

Alliance Engineering Consultants, Inc.
4701 Patrick Henry Drive, Bldg. 10
Santa Clara, CA 95054
phone (408) 970-9888
fax (408) 970-9316
www.aec-engineers.com

PROJECT NO. 101-20-02

HED
417 Montgomery Street
Suite 400
San Francisco, California
94104 USA
(415) 981-2345
WWW.HED.DESIGN

© 2019

DEMOLITION PLAN ELECTRICAL

E1.1

SHEET NOTES:

1. PROVIDE A 30A/3P, 240V MAX. NON-FUSIBLE DISCONNECT SWITCH IN NEMA 1 ENCLOSURE. MAKE FINAL CONNECTION TO BLEACHER MOTORS.
2. PROVIDE (N) 30A/3P, 240V MAX. CIRCUIT BREAKER IN (E) SPACES OF (E) PANEL "DL4", (N) CIRCUIT BREAKER TYPE AND INTERRUPTING RATING SHALL MATCH (E).

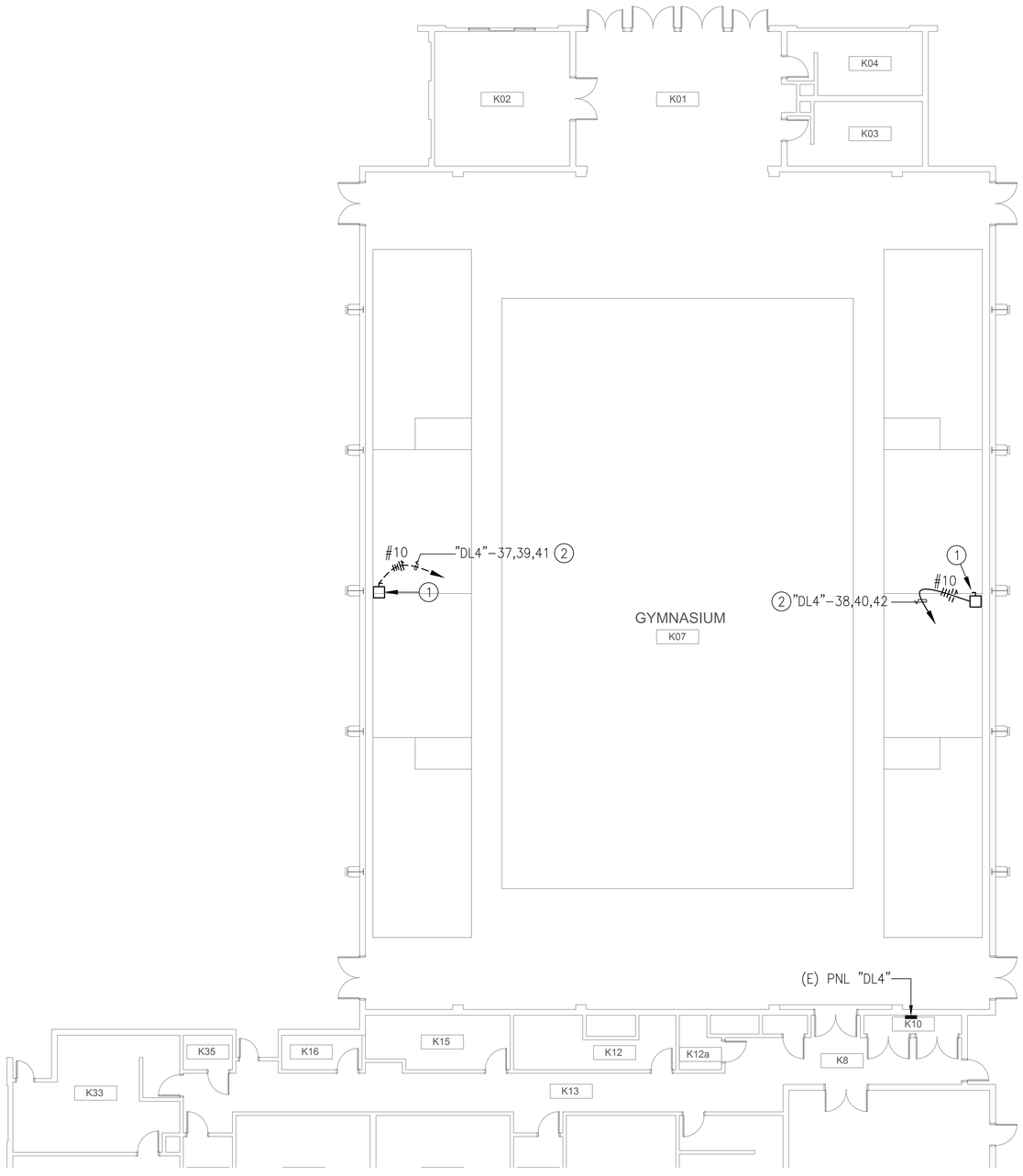

1 E2.1 ELECTRICAL PLAN
SCALE: 1/8"= 1'-0"

310 Nova Albion Way
San Rafael, CA 94903 415.492.3200

Terra Linda High School Modernization

310 Nova Albion Way
San Rafael, CA 94903
415.492.3200

Date	Issued For
1/22/2020	DSA Submittal

Alliance Engineering Consultants, Inc.
4701 Patrick Henry Drive, Bldg. 12
Santa Clara, CA 95054
phone (408) 970-9888
fax (408) 970-9376
www.aec-engineers.com

PROJECT NO. 101-20-02

HED
417 Montgomery Street
Suite 400
San Francisco, California
94104 USA
(415) 981-2345
WWW.HED.DESIGN

© 2019

ELECTRICAL PLAN GYMNASIUM

E2.1

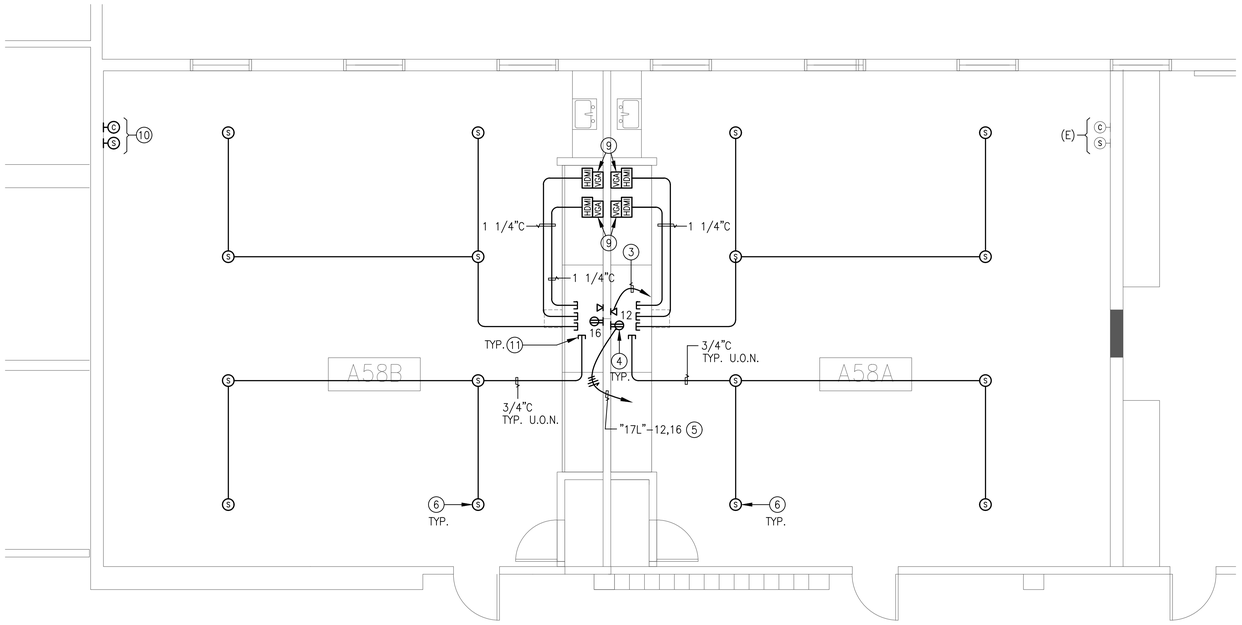

1 E2.2 ELECTRICAL PLAN

SCALE: 1/4"= 1'-0"

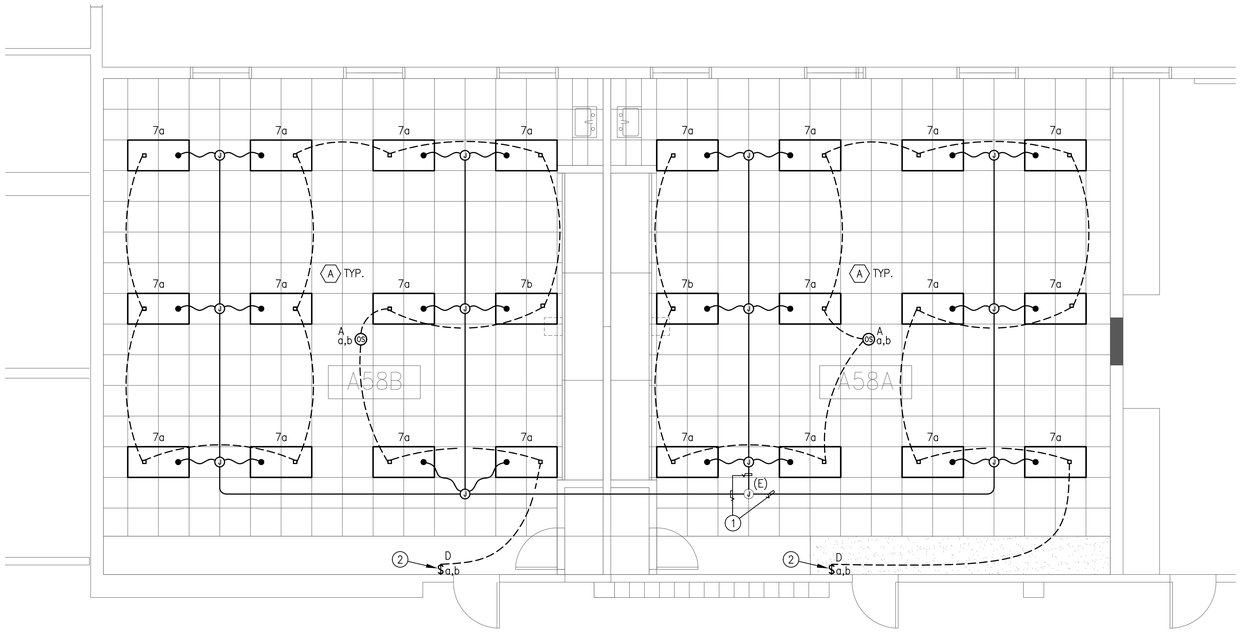

2 E2.2 LIGHTING PLAN

SCALE: 1/4"= 1'-0"

SHEET NOTES:

1. INTERCEPT (E) CIRCUIT "DH5"-7 AND EXTEND (N) CONDUIT AND WIRES TO (N) LIGHT FIXTURES AS SHOWN.
2. SWITCH SHALL BE PROGRAMMED TO ACHIEVE SWITCHING ARRANGEMENT SHOWN.
3. MOUNT DEVICES ±7'-6" A.F.F. NEXT TO PROJECTOR.
4. 120V POWER CONNECTION FOR PROJECTOR
5. UTILIZE (E) SPARE CIRCUIT BREAKER, REFER TO DWG. E1.1 FOR THE LOCATION OF (E) ELECTRICAL PANELBOARD.
6. CEILING MOUNTED SPEAKER CONNECTED TO PROJECTOR/MONITOR.
7. HOMERUN (2) CAT 6A CABLE TO (E) IDF LOCATED IN ROOM A53, REFER TO DWG. E1.1.
8. (1) HDMI & (1) VGA INPUT FOR MONITOR.
9. (1) HDMI & (1) VGA INPUT FOR PROJECTOR.
10. PROVIDE (N) CLOCK/SPEAKER TO MATCH (E), REFER TO RISER DIAGRAM FOR WIRING CONNECTION.
11. STUB-DOWN CONDUIT FROM ABOVE CEILING NEXT TO PROJECTOR.

SRJC
310 Nova Albion Way
San Rafael, CA 94903 415.492.3200

Terra Linda High School Modernization

310 Nova Albion Way
San Rafael, CA 94903
415.492.3200

Date	Issued For
1/22/2020	DSA Submittal

KENNETH S. NUNN
No. 11537
Exp. 6/30/21
ELECT.
STATE OF CALIFORNIA

Alliance Engineering Consultants, Inc.
2019 Palace Henry Drive, Bldg. 7B
Santa Clara, CA 95054
phone (408) 970-9888
fax (408) 970-9170
PROJECT NO. 101-20-02
www.aec-engineers.com

HED
417 Montgomery Street
Suite 400
San Francisco, California
94104 USA
(415) 981-2345
WWW.HED.DESIGN

© 2019

ELECTRICAL PLAN CLASSROOMS

E2.2

SHEET NOTES:

1. HOMERUN CIRCUIT TO (N) INVERTER LOCATED IN ELECTRICAL ROOM NEXT TO ADMIN. OFFICE. INVERTER SHALL BE IOTA CAT #IIS-550-HE. CONNECT INVERTER TO 15A/1P, 277V CIRCUIT BREAKER OF (E) ELECTRICAL PANEL IN THE ELECTRICAL ROOM IN ADMIN. BUILDING.
2. LIGHT CIRCUIT SHALL BE HOMERUN VIA LIGHTING CONTROL PANEL "LCP".
3. PROVIDE ASTRONOMIC TIME CLOCK, TORK CAT #7202Z AND INSTALL IN THE ELECTRICAL ROOM NEXT TO ADMIN. OFFICE.
4. CONCRETE PULLBOX, CHRISTY CAT #B1017 WITH 12" EXTENSION. COVER SHALL BE ENGRAVED WITH DESIGNATION "LIGHTING".

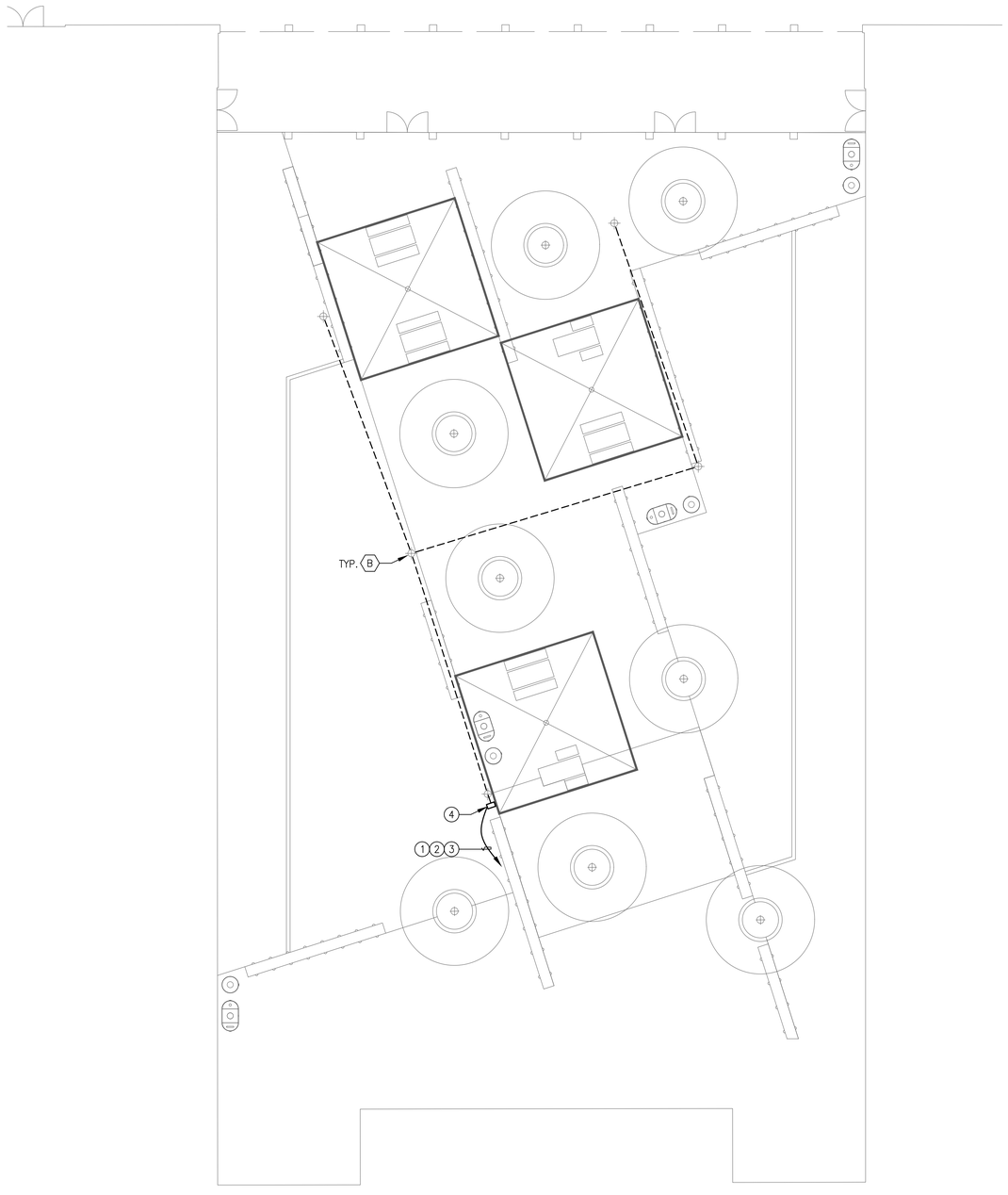

1 / E2.3 ELECTRICAL SITE LIGHTING
SCALE: 1/8"= 1'-0"

SR
310 Nova Albion Way
San Rafael, CA 94903 415.492.3200

Terra Linda High School Modernization

310 Nova Albion Way
San Rafael, CA 94903
415.492.3200

Date	Issued For
1/22/2020	DSA Submittal

RECORDED PROFESSIONAL ENGINEER
KENNETH S. NAM
No. 11537
Exp. 6/30/21
ELECT.
STATE OF CALIFORNIA

AEC Alliance Engineering Consultants, Inc.
4701 Patrick Henry Drive, Bldg. 10
Santa Clara, CA 95054
phone (408) 970-9888
fax (408) 970-9316
www.aec-engineers.com

PROJECT NO. 101-20-02

HED
417 Montgomery Street
Suite 400
San Francisco, California
94104 USA
(415) 981-2345
WWW.HED.DESIGN

© 2019

ELECTRIAL SITE LIGHTING

E2.3

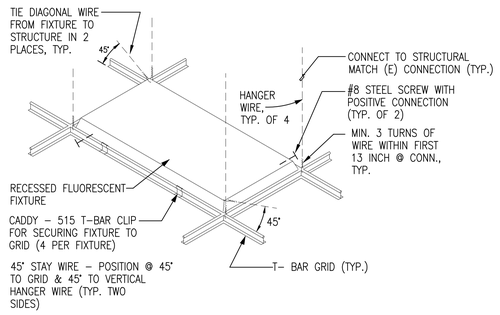

1 E3.1 TYPICAL SUPPORT REQUIREMENTS FOR RECESSED LIGHT FIXTURES

NOT TO SCALE

LIGHTING FIXTURE SCHEDULE

MARK	MANUFACTURERS MODEL NO.	LAMPS QTY.	LAMPS TYPE	TOTAL WATTS	VOLTS	MOUNTING	DESCRIPTION AND REMARKS	TOTAL WEIGHT	MTG. DETAIL
A	LITHONIA LIGHTING CAT #2TL446L–FWA12 D50–LP835 N80	–	LED	50	277	RECESSED LAY–IN	2'x4' LED LIGHT FIXTURE WITH PRISMATIC ACRYLIC LENS, 0–10V DRIVER.	10LBS	1/E3.1
B	ERCO LIGHTING CAT #33944023	–	LED	29	277	GROUND MOUNTED	35 7/16" x 6 11/16" LED BOLLARD LUMINAIRE WITH CORROSION RESISTANT CAST ALUMINUM HOUSING. SUITABLE FOR OUTDOOR APPLICATION.	15LBS	2/E3.1

CLOCK SPEAKER MATERIAL LIST

CLOCK	SHALL MATCH EXISITNG
SPEAKER	SHALL MATCH EXISITNG

CLOCK/SPEAKER CABLE SCHEDULE

TYPE	DESCRIPTION
A	4 PAIRS CAT 6 (SPEAKER)
B	WEST PENN 238 (CLOCK)

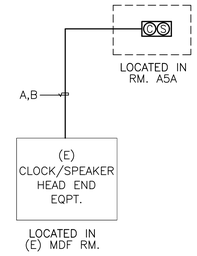

4 E3.1 CLOCK/SPEAKER RISER DIAGRAM

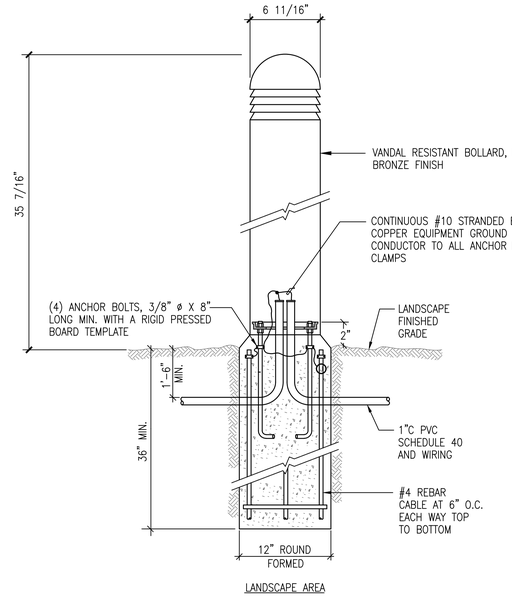

2 E3.1 BOLLARD FIXTURE MOUNTING DETAIL

NOT TO SCALE

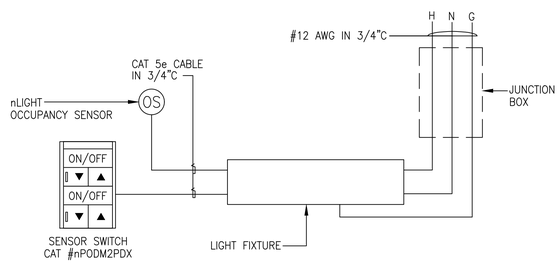

3 E3.1 LIGHTING CONTROL WIRING DIAGRAM

SRL
310 Nova Albion Way
San Rafael, CA 94903 415.492.3200

Terra Linda High School Modernization

310 Nova Albion Way
San Rafael, CA 94903
415.492.3200

Date	Issued For
1/22/2020	DSA Submittal

REGISTERED PROFESSIONAL ENGINEER KENNETH S. [illegible] No. 11537 Exp. 6/30/21 ELECT. STATE OF CALIFORNIA

Alliance Engineering Consultants, Inc.
1121 Fiscal Year Circle, Bldg. 10, Santa Clara, CA 95054
phone: (408) 970-9888
fax: (408) 970-9378
www.aec-engineers.com

PROJECT NO. 101-20-02

HED
417 Montgomery Street
Suite 400
San Francisco, California
94104 USA

(415) 981-2345

WWW.HED.DESIGN

© 2019

SCHEDULE AND DETAILS

E3.1

USASHADE & Fabric Structures, Inc.

SHADE STRUCTURE

DSA P.C. 04-118151

(REVISIONS TO 04-117219)

IDENTIFICATION STAMP
DIV. OF THE STATE ARCHITECT
APP. 04-118151 INC:
REVIEWED FOR
SS ☑ FLS ☑ ACS ☑
DATE: 05.22.19

THESE PLANS AND SPECIFICATIONS ARE THE PROPERTY OF USA SHADE AND FABRIC STRUCTURES AND SHALL NOT BE REPRODUCED WITHOUT THEIR WRITTEN PERMISSION.

USASHADE & Fabric Structures®
CORPORATE HEADQUARTERS
8505-A CHANCELLOR ROW
DALLAS, TX, 75247
800-966-5005

CERTIFICATIONS:
IAS CERTIFICATION No: FA-428
CLARK COUNTY MANUFACTURER CERTIFICATION NUMBER (NEVADA): 355

CUSTOMER:
San Rafael City Schools

PROJECT NAME:
Terra Linda High School

LOCATION:
320 Nova Albion Way
San Rafael, CA 94903

MODEL NUMBER: SEE SELECTION

SITE SPECIFIC APPLICATION TITLE SHEET SHALL INCLUDE:

APPLICABLE CODES

- 2019 CALIFORNIA ADMINISTRATIVE CODE, PART 1, TITLE 24 C.C.R.
- 2016 CALIFORNIA BUILDING CODE (CBC), PART 2, TITLE 24 C.C.R. (2015 INTERNATIONAL BUILDING CODE VOLUMES 1-2 AND 2016 CALIFORNIA AMENDMENTS)
- 2016 CALIFORNIA ELECTRICAL CODE (CEC) , PART 3, TITLE 24 C.C.R. (2014 NATIONAL ELECTRICAL CODE AND 2016 CALIFORNIA AMENDMENTS)
- 2016 CALIFORNIA MECHANICAL CODE (CMC), PART 4, TITLE 24 C.C.R. (2015 UNIFORM MECHANICAL CODE AND 2016 CALIFORNIA AMENDMENTS)
- 2016 CALIFORNIA PLUMBING CODE (CPC), PART 5, TITLE 24 C.C.R. (2015 UNIFORM PLUMBING CODE AND 2016 CALIFORNIA AMENDMENTS)
- 2016 CALIFORNIA ENERGY CODE (CEC), PART 6, TITLE 24 C.C.R.
- 2016 CALIFORNIA FIRE CODE, PART 9, TITLE 24 C.C.R. (2015 INTERNATIONAL FIRE CODE AND 2016 CALIFORNIA AMENDMENTS)
- 2016 CALIFORNIA GREEN BUILDING STANDARDS CODE, PART 11, TITLE 24 C.C.R.
- 2016 CALIFORNIA REFERENCED STANDARDS, PART 12, TITLE 24 C.C.R.
- TITLE 19 C.C.R., PUBLIC SAFETY, STATE FIRE MARSHAL REGULATIONS
- 2013 ASME A17.1 SAFETY CODE FOR ELEVATORS AND ESCALATORS

PARTIAL LIST OF APPLICABLE STANDARDS

NFPA 13	AUTOMATIC FIRE SPRINKLER SYSTEMS	2016 EDITION
NFPA 14	STANDPIPE AND HOSE SYSTEMS	2013 EDITION
NFPA 17	DRY CHEMICAL EXTINGUISHING SYSTEMS	2013 EDITION
NFPA 17a	WET CHEMICAL EXTINGUISHING SYSTEMS	2013 EDITION
NFPA 20	STATIONARY PUMPS FOR FIRE PROTECTION	2016 EDITION
NFPA 22	WATER TANKS FOR PRIVATE FIRE PROTECTION	2013 EDITION
NFPA 24	PRIVATE FIRE MAINS & THEIR APPURTENANCES	2016 EDITION
NFPA 25	STANDARD FOR INSPECTION, TESTING AND MAINTENANCE OF WATER-BASED FIRE PROTECTION SYSTEMS	2013 EDITION
NFPA 72	NATIONAL FIRE ALARM & SIGNALING CODE	2016 EDITION
NFPA 80	FIRE DOORS AND OTHER OPENING PROTECTIVES	2016 EDITION
NFPA 92	STANDARD FOR SMOKE CONTROL SYSTEMS	2015 EDITION
NFPA 253	CRITICAL RADIANT FLUX OF FLOOR COVERING SYSTEMS	2015 EDITION
NFPA 2001	CLEAN AGENT FIRE EXTINGUISHING SYSTEMS	2015 EDITION
ICC 300	ICC STANDARDS ON BLEACHERS, FOLDING AND TELESCOPING SEATING, AND GRAND STANDS	2012 EDITION
UL 300	FIRE TESTING OF FIRE EXTINGUISHING SYSTEMS FOR PROTECTION OF RESTAURANT COOKING AREAS	2005 EDITION
UL 464	AUDIBLE SIGNAL APPLIANCES	2003 EDITION
UL521	HEAT DETECTORS FOR FIRE PROTECTIVE SIGNALING SYSTEMS	1999 EDITION

REFERENCE CODE SECTION FOR NFPA STANDARDS-2016 CBC (SFM) CHAPTER 35. SEE CHAPTER 35 FOR STATE OF CALIFORNIA AMENDMENTS TO NFPA STANDARDS.

SEE INDIVIDUAL STRUCTURAL DRAWINGS FOR SPECIFIC DESIGN NOTES AND LOADING.

ALL WORK SHALL CONFORM TO 2016 EDITION TITLE 24, CALIFORNIA CODE OF REGULATIONS (C.C.R.).

ALL WORK SHALL BE IN COMPLIANCE WITH CFC CHAPTER 33 - FIRE SAFETY DURING CONSTRUCTION AND DEMOLITION.

CODE DATA

SITE SPECIFIC APPLICATION SITE PLAN SHALL INCLUDE:

1. ACTUAL DIMENSIONS OF SHADE STRUCTURES.
2. DIMENSIONS FROM ADJACENT STRUCTURES AND PROXIMITY OF ASSUMED OR ACTUAL PROPERTY LINES.
3. PROVIDE CODE ANALYSIS INCLUDING ACTUAL SHADE STRUCTURE AREA (SQ. FT.), OCCUPANCY TYPE (A-3), AND TYPE OF CONSTRUCTION (V-B). INDICATE OCCUPANT LOAD FACTOR per 2016 CBC, SECTION 1004.
4. INDICATE LOCATIONS OF FIRE EXTINGUISHER WITHIN 75 FEET.
5. SHOW LOCATIONS OF AUDIBLE FIRE ALARM.
6. INDICATE DIMENSIONS FROM THE ROOF TO THE HIGHER STRUCTURE OR TERRAIN FEATURE. MINIMUM DIMENSION OF 20' FOR SNOW LOAD MODEL (ASCE 7-10).
7. ACTUAL SITE ELEVATION (FT.) TO DETERMINE SITE OCCURS AT OR BELOW THE UPPER ELEVATION LIMIT FOR THE GROUND SNOW LOAD SHOWN IN ASCE 7-10 (FOR SNOW LOAD MODEL).
8. FOR RECESSED BASE PLATE (RBP) OPTION: ARCHITECT/ENGINEER OF RECORD TO SPECIFY THE LOWEST ANTICIPATED SERVICE TEMPERATURE (LAST), AS DEFINED IN AISC 341-10 SECTION A.3.4b, A4.1 AND A4.2 PER NOTE ON EACH INDIVIDUAL MODEL ENGINEERING DRAWING WHICH RELATES TO DEMAND CRITICAL WELD AND "L.A.S.T." TEMPERATURE (EITHER STRUCTURAL STEEL NOTE #14).
9. COMPLETE SCOPE OF WORK INCLUDING THE SHADE STRUCTURE MODEL NUMBER, P.C. NUMBER, AND SPECIFIC SIZE OF SHADE STRUCTURE.
10. ALL SADDLES, CLAMPS AND FITTINGS SHALL CONFORM TO THE GUIDELINES AS SPECIFIED IN APPENDICES "A, B & C" RESPECTIVELY IN ASCE 19-10, "STRUCTURAL APPLICATIONS OF STEEL CABLES FOR BUILDINGS."
11. ARCHITECTS OF RECORD TO DETERMINE IF SPECIFIC SITE IS IN MAPPED GEOLOGIC HAZARD ZONE. GEOHAZARD REPORT REQUIREMENTS PER DSA IR A-4.
12. ARCHITECTS OF RECORD TO DETERMINE IF SPECIFIC SITE IS IN A MAPPED FIRE HAZARD SEVERITY ZONE OR WILDLAND INTERFACE AREA.
13. PROVIDE COPY OF CURRENT REGISTERED FLAME RESISTANT PRODUCT LETTER ON SPECIFIC SITE PLAN.

GENERAL NOTES

DSA 103 - 1 / PC T-2.0

MODEL: DSA1032020-16
STRUCTURE: 20' x 20' x 12' SINGLE POST PYRAMID UNIT
MAX. AREA - 400 SQ. FT.
MAX. OCCUPANCY = 26

DSA 103 - 1 / PC T-2.0

MODEL: DSA1241414-16
STRUCTURE: 14' x 14' x 12' SINGLE POST PYRAMID CANTILEVER
MAX. AREA - 196 SQ. FT.
MAX. OCCUPANCY = 13

DSA 103 - 2 / PC T-2.0

MODEL: DSA30125-16
STRUCTURE: TRIANGLE
MAX. AREA - 1,271 SQ. FT.
MAX. OCCUPANCY = 110

MODEL: DSA30140-16
STRUCTURE: TRIANGLE
MAX. AREA - 682 SQ. FT.
MAX. OCCUPANCY = 46

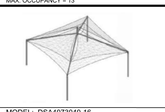

MODEL: DSA4073040-16
STRUCTURE: 30' x 40' x 14' MARINER PEAK
MAX. AREA - 1200 SQ. FT.
MAX. OCCUPANCY = 80

MODEL: DSA4073040-16
STRUCTURE: 30' x 40' x 18' MARINER PEAK
MAX. AREA - 1200 SQ. FT.
MAX. OCCUPANCY = 80

DSA 103 - 2 / PC T-2.0

MODEL: DSA401J-16
STRUCTURE: JOINED HIP
MAX. AREA - VARIES, SEE 24.1-1000 FOR OPTIONS
MAX. OCCUPANCY = VARIES

SEE SHEET 24.1-1000 FOR SELECTION OPTIONS

NUMBER OF UNITS JOINED IS GOVERNED BY TOTAL AREA, OCCUPANCY AND SITE CONDITIONS.

DSA 103 - 2 / PC T-2.0

MODEL: DSA4012030-16
STRUCTURE: 20' x 30' x 12' HIP UNIT
MAX. AREA - 600 SQ. FT.
MAX. OCCUPANCY = 40

MODEL: DSA4013030-16
STRUCTURE: 30' x 30' x 12' HIP UNIT
MAX. AREA - 900 SQ. FT.
MAX. OCCUPANCY = 60

MODEL: DSA4013040-16
STRUCTURE: 30' x 40' x 15' HIP UNIT
MAX. AREA - 1200 SQ. FT.
MAX. OCCUPANCY = 80

MODEL: DSA4014040-16
STRUCTURE: 40' x 40' x 15' HIP UNIT
MAX. AREA - 1600 SQ. FT.
MAX. OCCUPANCY = 106

DSA 103 - 2 / PC T-2.0

MODEL: DSA401Q-16
STRUCTURE: QUAD JOINED HIP
MAX. AREA - VARIES, SEE 25.1-1000 FOR OPTIONS
MAX. OCCUPANCY = VARIES

SEE SHEET 25.1-1000 FOR SELECTION OPTIONS

NUMBER OF UNITS JOINED IS GOVERNED BY TOTAL AREA, OCCUPANCY AND SITE CONDITIONS.

DSA 103 - 2 / PC T-2.0

MODEL: DSA603M01-16
STRUCTURE: 60' Ø HEXAGON
MAX. AREA - 1,040 SQ. FT.
MAX. OCCUPANCY = 69

MODEL: DSA603M02-16
STRUCTURE: 60' Ø HEXAGON
MAX. AREA - 2,078 SQ. FT.
MAX. OCCUPANCY = 156

UNIT SELECTION AND DESCRIPTION

	DRAWING NUMBER	DRAWING DESCRIPTION	STRUCTURE TYPE	MAX SIZE	MODEL NUMBER
	P.C. T-1.0	P.C. TITLE SHEET			
	P.C. T-2.0	DSA 103 FORMS			
	16.1-1000	PRODUCT INFORMATION	SINGLE POST PYRAMID	20 X 20	DSA1032020-16
	16.2-2000	REACTIONS	SINGLE POST PYRAMID	20 X 20	DSA1032020-16
	17.1-1000	PRODUCT INFORMATION	SINGLE POST PYRAMID CANTILEVER	14 X 14	DSA1241414-16
	17.2-2000	REACTIONS	SINGLE POST PYRAMID CANTILEVER	14 X 14	DSA1241414-16
	18.1-1000	PRODUCT INFORMATION	TRIANGLE	25 X 25	DSA30125-16
	18.2-2000	REACTIONS	TRIANGLE	25 X 25	DSA30125-16
	19.1-1000	PRODUCT INFORMATION	TRIANGLE	40 X 40	DSA30140-16
	19.2-2000	REACTIONS	TRIANGLE	40 X 40	DSA30140-16
	20.1-1000	PRODUCT INFORMATION	HIP	20 X 30	DSA401203012-16
	20.2-2000	REACTIONS	HIP	20 X 30	DSA401203012-16
	21.1-1000	PRODUCT INFORMATION	HIP	30 X 30	DSA401303012-16
	21.2-2000	REACTIONS	HIP	30 X 30	DSA401303012-16
	22.1-1000	PRODUCT INFORMATION	HIP	30 X 40	DSA401304012-16
	22.2-2000	REACTIONS	HIP	30 X 40	DSA401304012-16
	23.1-1000	PRODUCT INFORMATION	HIP	40 X 40	DSA4014040-16
	23.2-2000	REACTIONS	HIP	40 X 40	DSA4014040-16
	24.1-1000	PRODUCT INFORMATION	JOINED HIPS	VARIES	DSA401J-16
	24.2-1001	DETAILS	JOINED HIPS	VARIES	DSA401J-16
	24.3-2000	REACTIONS	JOINED HIPS	VARIES	DSA401J-16
	25.1-1000	PRODUCT INFORMATION	QUAD JOINED HIPS	VARIES	DSA401Q-16
	25.2-1001	DETAILS	QUAD JOINED HIPS	VARIES	DSA401Q-16
	25.3-2000	REACTIONS	QUAD JOINED HIPS	VARIES	DSA401Q-16
	26.1-1000	PRODUCT INFORMATION	HEXAGON	40 Ø	DSA60340-16
	26.2-2000	REACTIONS	HEXAGON	40 Ø	DSA60340-16
	27.1-1000	PRODUCT INFORMATION	HEXAGON	60 Ø	DSA60360-16
	27.2-2000	REACTIONS	HEXAGON	60 Ø	DSA60360-16
	28.1-1000	PRODUCT INFORMATION	MARINER PEAK	30 X 40	DSA4073040-16
	28.2-2000	REACTIONS	MARINER PEAK	30 X 40	DSA4073040-16

TOTAL SHEET COUNT: 30 SHEETS

ARCHITECT

HIGGINSON ARCHITECTS INCORPORATED
707 Brookside Avenue
Redlands, CA 92373
(909) 375-3030
www.haarchinc.com

LICENSED ARCHITECT DAVID HIGGINSON NO.C19166 REN. 10-31-19 STATE OF CALIFORNIA

ARCHITECT

Mark Lowe, S.E.
Structural Engineer
19471 Misty Ridge Lane
Trabuco Canyon, California 92367
ph. 949-400-1265
mallowe@me.com

REGISTERED PROFESSIONAL ENGINEER MARK ALBERT LOWE No. 3693 STRUCTURAL STATE OF CALIFORNIA
5/21/19

ENGINEER

DSA PRE-CHECK SHADE STRUCTURES

P.C. 04-118151
(REVISIONS TO 04-117219)

PRE-CHECK (PC) DOCUMENT
Code : 2016 CBC
A separate project application for construction is required.

Eng. By :	DWH	05/22/19
Design By :	DWH	05/22/19
Approved By :	DWH	05/22/19

DRAWING DESCRIPTION:
P.C. TITLE SHEET

SHEET
P.C. T-1.0

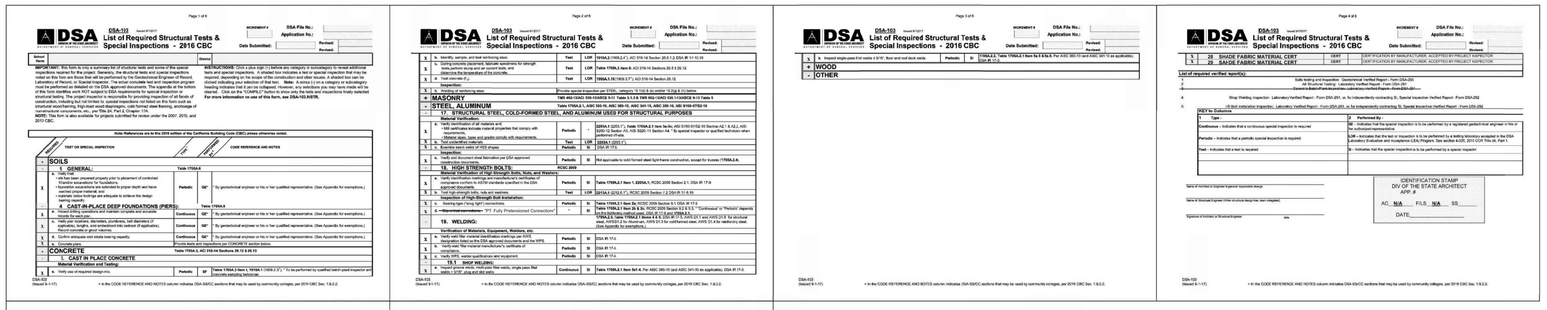

Page 1 of 6

DSA DIVISION OF THE STATE ARCHITECT

DSA-103 Issued 9/1/2017

List of Required Structural Tests & Special Inspections - 2016 CBC

INCREMENT #: Date Submitted:

DSA File No.: Application No.: Revised: Revised:

School Name: All Models Except: DSA4512030-16, DSA4513030-16, DSA4513030-18, DSA4513040-18, DSA4513050-18 | District:

IMPORTANT: This form is only a summary list of structural tests and some of the special inspections required by the California Building Code and the applicable referenced standards noted on this form are those that will be performed by the Geotechnical Engineer of Record, Laboratory of Record, or Special Inspector. The actual complete test and inspection program required for the project will be listed in the Statement of Special Inspections. The use or omission of the form identifies work NOT subject to DSA requirements for special inspection or structural testing. The project inspector is responsible for providing inspection of all tasks of construction that are subject to DSA special inspection, including but not limited to: field welding, structural wood framing, high-load wood diaphragms, cold-formed steel framing, anchorage of non-structural components, etc., per Title 24, Part 2, Chapter 17A.
NOTE: This form is also available for projects submitted for review under the 2007, 2010, and 2013 CBC.

INSTRUCTIONS: Click a box (up) or (-) before any category or subcategory to reveal additional items. Select the appropriate box for each item listed. Add any items not listed that are specially required, depending on the scope of the construction and other issues. A shaded box can be clicked indicating your selection of that test. **Note:** A minus (-) on a category or subcategory indicates that there are no items listed under it. Click on the minus to close the list. Click on the plus (+) to expand. Click on the "CLEAR ALL" button to clear only the tests and inspections finally selected.
For more information on use of this form, see DSA-103.INSTR.

Note: References are to the 2016 edition of the California Building Code (CBC) unless otherwise noted.

	TEST OR SPECIAL INSPECTION	CONTINUOUS	PERIODIC	CODE REFERENCE AND NOTES
+	**SOILS**			
-	**1. GENERAL:**			Table 1705A.6
X	a. Verify that: • site has been prepared properly prior to placement of controlled fill and/or excavations for foundations, • foundation excavations are extended to proper depth and have reached proper material, and • expansive soil has been removed or adequate measures to address the design have been implemented.		Periodic	SI* - By geotechnical engineer or his or her qualified representative. (See Appendix for exemptions.)
-	**4. CAST-IN-PLACE DEEP FOUNDATIONS (PIERS):**			Table 1705A.9
X	a. Prior to placement of concrete, verify that excavations are clean and that loose soil has been removed.	Continuous	SI*	By geotechnical engineer or his or her qualified representative. (See Appendix for exemptions.)
X	b. Verify pier locations, diameters, plumbness, bell diameters (if applicable), and lengths (measured into bottom of excavation). Record concrete or grout volumes.	Continuous	SI*	By geotechnical engineer or his or her qualified representative. (See Appendix for exemptions.)
X	d. Confirm adequate end strata bearing capacity.	Continuous	SI*	By geotechnical engineer or his or her qualified representative. (See Appendix for exemptions.)
X	e. Concrete mix.	Provide tests and inspections per CONCRETE section below.		
+	**CONCRETE**	Table 1705A.3, ACI 318-14 Sections 26.12 & 26.13		
-	**1. CAST IN PLACE CONCRETE**			
	Material Verification and Testing:			
X	a. Verify use of required design mix.	Periodic	SI*	Table 1705A.3 Item 1, 1910A.1 (1908.2.2*) - To be performed by qualified batch plant inspector and records sampling testimony.

DSA-103 (Issued 9-1-17)

+ In the CODE REFERENCE AND NOTES column indicates DSA-SS/CC sections that may be used by community colleges, per 2016 CBC Sec. 1.9.2.2.

Page 2 of 6

DSA DIVISION OF THE STATE ARCHITECT

DSA-103 Issued 9/1/2017

List of Required Structural Tests & Special Inspections - 2016 CBC

INCREMENT #: Date Submitted:

DSA File No.: Application No.: Revised: Revised:

X	b. Identify, sample, and test reinforcing steel.	Test	LOR	1910A.2 (1908.2.4*), ACI 318-14 Section 26.6.3.2, DSA SI 17.13.16	
X	c. Testing concrete placement techniques appropriate for strength tests,perform slump and air content tests, and determine the temperature of the concrete.	Test	LOR	Table 1705A.3 Item 4; ACI 318-14 Sections 26.5 & 26.12	
X	d. Test concrete f'c.	Test	LOR	1910A.3, SI 17.13.1*), ACI 318-14 Section 26.12.	
	Inspection:				
X	b. Welding of reinforcing steel.	Provide special inspection per 1705C, category 19.1(a) & (b) and/or 19.2(a) & (b) below.			
+	**MASONRY**	TMS 402-13/ACI 530-13/ASCE 5-13 Table 1.1.5 & TMS 602-13/ACI 530.1-13/ASCE 6-13 Table 4			
-	**STEEL, ALUMINUM**	Table 1705A.2.1, AISC 360-16, AISC 341-16, AISC 358-16, AISI S100-16/S1-16, AISI S136-16/S3-16			
-	**17. STRUCTURAL STEEL, COLD-FORMED STEEL, AND ALUMINUM USED FOR STRUCTURAL PURPOSES**				
	Material Verification:				
X	a. Verify identification of all materials and documentation that indicate material properties that comply with requirements. Material: steel, bolts and anchor rods with requirements.	Periodic	-	2205A.3 (2213.1*), Table 1705A.2.1 Item 5a thru 5d; AISI S100-07/S2-10 Section A2.1 & A2.2, AISI S200-12 Section A3, AISI S220-11 Section 1.A.* - By special inspector or qualified technician when approved by the engineer.	
X	b. Verify test reports.	Test	LOR	2205A.3 (2213.1*)	
X	c. Examine welds within all HSS shapes.	Periodic	SI	DSA SI 17.5.	
	Inspection:				
X	a. Verify cold-formed steel framing per DSA approved construction documents.	Periodic	SI	Not applicable to cold-formed steel light-frame construction, except for trusses 2799SJI.C.	
-	**19. WELDING:**			1705A.2.1, Table 1705A.3 Items 6 & 6a; 2205.1 (2213.1*), AISC 341-16 Section A3.6 for structural steel, AWS D1.3 for sheet steel, AWS D1.8 for seismic force resisting system welding, AWS D1.4 for reinforcing steel. (See Appendix for exemptions.)	
	Verification of Materials, Equipment, Welders, etc.				
X	a. Verify identification markings and manufacturer's certificates of compliance for welding and NDT/DT standards specified in the DSA approved documents.	Periodic	SI	Table 1705A.2.1 Item 1; 2205A.1, RCSC 2009 Section 2.1; DSA SI 17.0	
X	b. Verify welder qualifications and the WPS.	Periodic	SI	DSA SI 17.5.	
X	c. Verify that fillet material, tab/run-off material, and the WPS conform to requirements.	Periodic	SI	DSA SI 17.5.	
X	d. Verify welder qualifications and equipment.	Periodic	SI	DSA SI 17.5.	
-	**19.1 SHOP WELDING**				
X	a. Inspect shop welds, including the fillet welds, single-pass fillet welds ≤ 5/16", plug and slot welds.	Continuous	SI	Table 1705A.2.1 Item 6a1-4; Per AISC 360-10 (and AISC 341-10 as applicable); DSA SI 17.5.	
X	b. Inspect single-pass fillet welds ≤ 5/16".	Periodic	SI	1705A.2.1, Table 1705A.2.1 Item 6a 5 & 6a 6 Per AISC 360-10 (and AISC 341-10 as applicable); DSA SI 17.5.	
+	**WOOD**				
-	**OTHER**				

DSA-103 (Issued 9-1-17)

+ In the CODE REFERENCE AND NOTES column indicates DSA-SS/CC sections that may be used by community colleges, per 2016 CBC Sec. 1.9.2.2.

Page 3 of 6

DSA DIVISION OF THE STATE ARCHITECT

DSA-103 Issued 9/1/2017

List of Required Structural Tests & Special Inspections - 2016 CBC

INCREMENT #: Date Submitted:

DSA File No.: Application No.: Revised: Revised:

X	b. Inspect single-pass fillet welds ≤ 5/16", floor and roof deck welds	Periodic	SI	1705A.2.1, Table 1705A.2.1 Item 6a 5 & 6a 6; Per AISC 360-10 (and AISC 341-10 as applicable); DSA SI 17.5.	
+	**WOOD**				
-	**OTHER**				

DSA-103 (Issued 9-1-17)

+ In the CODE REFERENCE AND NOTES column indicates DSA-SS/CC sections that may be used by community colleges, per 2016 CBC Sec. 1.9.2.2.

Page 4 of 6

DSA DIVISION OF THE STATE ARCHITECT

DSA-103 Issued 9/1/2017

List of Required Structural Tests & Special Inspections - 2016 CBC

INCREMENT #: Date Submitted:

DSA File No.: Application No.: Revised: Revised:

X	28 SHADE FABRIC MATERIAL CERT	CERT	CERTIFICATION BY MANUFACTURER, ACCEPTED BY PROJECT INSPECTOR
X	29 SHADE FABRIC FIRE MARSHALL CERT	CERT	CERTIFICATION BY MANUFACTURER, ACCEPTED BY PROJECT INSPECTOR

List of required verified report(s):

1 Soils testing and Inspection - Geotechnical Verified Report - Form DSA-293
2 All Structural Testing - Laboratory Verified Report - Form DSA-291
3 Concrete Batch Plant Inspection- Laboratory Verified Report- Form DSA-291
4 Shop Welding Inspection- Laboratory Verified Report - Form DSA-291, or, for Independently contracting SI, Special Inspection Verified Report - Form DSA-292
5 Fill And Instruction Inspection- Laboratory Verified Report - Form DSA-291, or, for Independently contracting SI, Special Inspection Verified Report - Form DSA-292

KEY to Columns

Type -	Performed By -
Continuous – Indicates that a continuous special inspection is required	**SI** – Indicates that the special inspection is to be performed by a registered geotechnical engineer or his or her authorized representative
Periodic – Indicates that a periodic special inspection is required	**LOR** - Indicates that the test or inspection is to be performed by a testing laboratory accepted in the DSA Laboratory Evaluation and Acceptance (LEA) Program. See section 4-335, 2013 CCR Title 24, Part 1.
Test – Indicates that a test is required	**SI** – Indicates that the special inspection is to be performed by a special inspector

Name of Architect or Engineer in general responsible charge: _____

Name of Structural Engineer (Enter structural design has been delegated): _____

Signature of Architect or Structural Engineer: _____ date: _____

IDENTIFICATION STAMP
DIV OF THE STATE ARCHITECT
APP. #
AC. N/A FLS N/A SS
DATE

DSA-103 (Issued 9-1-17)

+ In the CODE REFERENCE AND NOTES column indicates DSA-SS/CC sections that may be used by community colleges, per 2016 CBC Sec. 1.9.2.2.

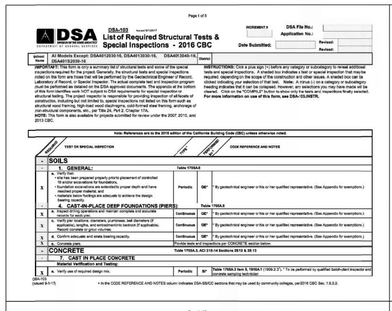

Page 5 of 6

DSA DIVISION OF THE STATE ARCHITECT

DSA-103 Issued 9/1/2017

List of Required Structural Tests & Special Inspections - 2016 CBC

INCREMENT #: Date Submitted:

DSA File No.: Application No.: Revised: Revised:

Appendix: Work Exempt from DSA Requirements for Special Inspection or Structural Testing

Exempt items given in IR A-2 or the 2016 CBC (including DSA amendments) and those items identified below with an "X" by the design professional are NOT subject to DSA requirements for the structural tests or special inspections noted. Items marked as exempt shall be identified by either: 1) listing specific details/sheets noted in the spaces provided below OR 2) on the approved construction documents. The project inspector shall verify all construction complies with the approved construction documents.

Exempt by DSA IR A-2		Exempt by IR A-2
	Note:	
X	1. Deep foundations acting as a cantilever footing designed based on minimum allowable pressures per 2016 CBC Table 1806A.2 and having no special inspection requirements per 2016 CBC Table 1705A.9 (i.e., not requiring engineering design, assessment, inherent vertical load in shafts to verify fixed-head base) have 3 pier and other light-weight structures of which the span is 6 feet (1829 mm) or less as specified in 2016 CBC Section 1809.8.	
X	2. Masonry foundations meeting the exception item #1 criteria specified in 2016 CBC Section 1809.8.	
	Optional: List details for applicable exempt items:	
	Concrete/Masonry:	
X	1. Pier footings and footings and grade beams designed based on 2016 CBC Table 1806A.2 and having no special inspection requirements per 2016 CBC Table 1705A.9 and/or Table 1705A.3 are "Not Threatened" zones in CBC Section 1908A.1.2(5) and/or residence ASCE 7-10, Section 12.7.4(1a-2) interior nonstructural wall partitions meeting criteria listed in exempt item 3 for "Framing."	
X	2. Concrete batch plant inspection is not required for items given in CBC Section 1705A.3.3.2 subject to the requirements and limitations in that section.	

Exempt by DSA IR A-2		Exempt by IR A-2
	Welding:	
X	1. Stationary and supervised gates with maximum leaf span or clear opening section for rolling gates of 15' and span height less than 6'-0" where forward adjacent grade (When located above circulation or egress path) is within 3'-0" of the gate. These gates are not located within 1.5x gate/fence height (max 6'-0") of the edge of floor or roof.	
X	2. Handrails, guardrails, and modular or decorative fences associated with seating surfaces less than 20" above adjacent grade (including pool take-out/entry steps) per the "Exception" language in 2016 CBC Section 1607.8.1 and ASCE 7-10 Section 12.7.4(1a-2).	
X	3. Non-structural interior nonbearing cold-formed steel framing assembly less than 10'-0" in height between floor and ceiling and less than 100 lb/linear foot (1460 N/m) dead load for curtain walls, partitions, interior soffits, etc. supporting only self weight or lightweight finishes or adhered tile, veneer, or paint. Studs are spaced at 24" (610 mm) on center or less, and the span is 12'-0" (3658 mm) or less and not over an exit way. Maximum header height for a member shall not exceed the equivalent of that assuming floor-to-10'-0" (assuming a 4'-0" tall wall for a header or king stud.	
X	4. Structural wood shear walls and shear panels designed based on 2016 CBC Chapter 4 or 16A and having no special inspection requirements per 2016 CBC Table 1705A.9 and/or Table 1705A.3 (i.e., light-gauge 16 gauge (1.5 mm) or less metal connectors, staples with crowns 7/16" (11 mm) or less, and connections of such frames to supports/concrete elements only) wording will require special inspection as noted in selected item(s) for section 19, 19.1 and/or 19.2 of listing above).	
X	5. Non-Structural wood framing and cold-framed steel framing, anchorage of non-structural components, etc., per Title 24, Part 2, Chapter 17A.	
X	6. Miscellaneous structures and appurtenances not listed above, such as flagpoles, cooling towers, signs, tanks, and similar structures supported by unbraced towers, frames, or legs.	
X	7. Manufactured components (e.g., doors, access doors, and mechanical, electrical, or plumbing equipment weighing less than 2000# (equipment only) and their supports and attachments) wording will require special inspection as noted in selected item(s) for section 19, 19.1 and/or 19.2 of listing above).	
X	8. TV Studios, projector booths with a wall rating less than 2hr (A,B,D) and nonaddressed equipment, (e.g., playground structures, basketball backstops, etc.) Connections of such elements to supports/structural elements only, welding will require special inspection as noted in selected item(s) for section 19, 19.1 and/or 19.2 of listing above).	

DSA-103 (Issued 9-1-17)

+ In the CODE REFERENCE AND NOTES column indicates DSA-SS/CC sections that may be used by community colleges, per 2016 CBC Sec. 1.9.2.2.

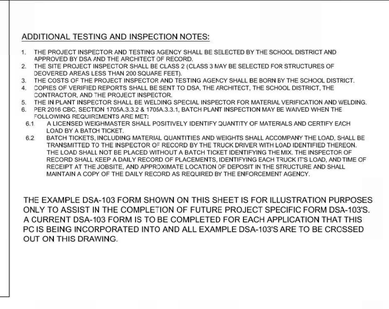

Page 6 of 6

DSA DIVISION OF THE STATE ARCHITECT

DSA-103 Issued 9/1/2017

List of Required Structural Tests & Special Inspections - 2016 CBC

INCREMENT #: Date Submitted:

DSA File No.: Application No.: Revised: Revised:

X	b. Masonry retaining walls less than 4'-0" above the top of foundation not supporting a surcharge and free standing (cantilever) non-shear masonry walls up to 6'-0" (max exempted grade is not require grout), mortar or masonry cmu footing or DSA specific inspection.	X	Any request for exempt non-structural components given in CBC Section 1705A.13.6 (except methods ASCE 7-10, Section 13.5.6) relating the following: 1) when supported on a floor/roof, metal and reaching composite center of mass (including component's center of mass) >= 4' above adjacent walking surface, or other hung from a wall or roof/floor, GSA for discrete units or >6 psf for distributed material.
X	c. Epoxy when dowels in site fixtures.		Optional: List details for applicable exempt items:
	Optional: List details for applicable exempt items:		

DSA-103 (Issued 9-1-17)

+ In the CODE REFERENCE AND NOTES column indicates DSA-SS/CC sections that may be used by community colleges, per 2016 CBC Sec. 1.9.2.2.

ADDITIONAL TESTING AND INSPECTION NOTES:

1. THE PROJECT INSPECTOR AND TESTING AGENCY SHALL BE SELECTED BY THE SCHOOL DISTRICT AND APPROVED BY DSA AND THE ARCHITECT OF RECORD.
2. THE SITE PROJECT INSPECTOR SHALL BE CLASS 2 (CLASS 3 MAY BE SELECTED FOR STRUCTURES OF DEOVERED AREAS LESS THAN 200 SQUARE FEET).
3. THE COSTS OF THE PROJECT INSPECTOR AND TESTING AGENCY SHALL BE BORN BY THE SCHOOL DISTRICT.
4. COPIES OF VERIFIED REPORTS SHALL BE SENT TO DSA, THE ARCHITECT, THE SCHOOL DISTRICT, THE CONTRACTOR, AND THE PROJECT INSPECTOR.
5. THE IN PLANT INSPECTOR SHALL BE WELDING SPECIAL INSPECTOR FOR MATERIAL VERIFICATION AND WELDING.
6. PER 2016 CBC, SECTION 1705A.3.3.2 & 1705A.3.3.1, BATCH PLANT INSPECTION MAY BE WAIVED WHEN THE FOLLOWING REQUIREMENTS ARE MET;
   - 6.1 A LICENSED WEIGHMASTER SHALL POSITIVELY IDENTIFY QUANTITY OF MATERIALS AND CERTIFY EACH LOAD BY A BATCH TICKET.
   - 6.2. BATCH TICKETS, INCLUDING MATERIAL QUANTITIES AND WEIGHTS SHALL ACCOMPANY THE LOAD, SHALL BE TRANSMITTED TO THE INSPECTOR OF RECORD BY THE TRUCK DRIVER WITH LOAD IDENTIFIED THEREON. THE LOAD SHALL NOT BE PLACED WITHOUT A BATCH TICKET IDENTIFYING THE MIX. THE INSPECTOR OF RECORD SHALL KEEP A DAILY RECORD OF PLACEMENTS, IDENTIFYING EACH TRUCK IT'S LOAD, AND TIME OF RECEIPT AT THE JOBSITE, AND APPROXIMATE LOCATION OF DEPOSIT IN THE STRUCTURE AND SHALL MAINTAIN A COPY OF THE DAILY RECORD AS REQUIRED BY THE ENFORCEMENT AGENCY.

THE EXAMPLE DSA-103 FORM SHOWN ON THIS SHEET IS FOR ILLUSTRATION PURPOSES ONLY TO ASSIST IN THE COMPLETION OF FUTURE PROJECT SPECIFIC FORM DSA-103'S. A CURRENT DSA-103 FORM IS TO BE COMPLETED FOR EACH APPLICATION THAT THIS PC IS BEING INCORPORATED INTO AND ALL EXAMPLE DSA-103'S ARE TO BE CROSSED OUT ON THIS DRAWING.

ADDITIONAL TESTING AND INSPECTION NOTES:

1. THE PROJECT INSPECTOR AND TESTING AGENCY SHALL BE SELECTED BY THE SCHOOL DISTRICT AND APPROVED BY DSA AND THE ARCHITECT OF RECORD.
2. THE SITE PROJECT INSPECTOR SHALL BE CLASS 2 (CLASS 3 MAY BE SELECTED FOR STRUCTURES OF DEOVERED AREAS LESS THAN 200 SQUARE FEET).
3. THE COSTS OF THE PROJECT INSPECTOR AND TESTING AGENCY SHALL BE BORN BY THE SCHOOL DISTRICT.
4. COPIES OF VERIFIED REPORTS SHALL BE SENT TO DSA, THE ARCHITECT, THE SCHOOL DISTRICT, THE CONTRACTOR, AND THE PROJECT INSPECTOR.
5. THE IN PLANT INSPECTOR SHALL BE WELDING SPECIAL INSPECTOR FOR MATERIAL VERIFICATION AND WELDING.
6. PER 2016 CBC, SECTION 1705A.3.3.2 & 1705A.3.3.1, BATCH PLANT INSPECTION MAY BE WAIVED WHEN THE FOLLOWING REQUIREMENTS ARE MET;
   - 6.1 A LICENSED WEIGHMASTER SHALL POSITIVELY IDENTIFY QUANTITY OF MATERIALS AND CERTIFY EACH LOAD BY A BATCH TICKET.
   - 6.2. BATCH TICKETS, INCLUDING MATERIAL QUANTITIES AND WEIGHTS SHALL ACCOMPANY THE LOAD, SHALL BE TRANSMITTED TO THE INSPECTOR OF RECORD BY THE TRUCK DRIVER WITH LOAD IDENTIFIED THEREON. THE LOAD SHALL NOT BE PLACED WITHOUT A BATCH TICKET IDENTIFYING THE MIX. THE INSPECTOR OF RECORD SHALL KEEP A DAILY RECORD OF PLACEMENTS, IDENTIFYING EACH TRUCK IT'S LOAD, AND TIME OF RECEIPT AT THE JOBSITE, AND APPROXIMATE LOCATION OF DEPOSIT IN THE STRUCTURE AND SHALL MAINTAIN A COPY OF THE DAILY RECORD AS REQUIRED BY THE ENFORCEMENT AGENCY.

THE EXAMPLE DSA-103 FORM SHOWN ON THIS SHEET IS FOR ILLUSTRATION PURPOSES ONLY TO ASSIST IN THE COMPLETION OF FUTURE PROJECT SPECIFIC FORM DSA-103'S. A CURRENT DSA-103 FORM IS TO BE COMPLETED FOR EACH APPLICATION THAT THIS PC IS BEING INCORPORATED INTO AND ALL EXAMPLE DSA-103'S ARE TO BE CROSSED OUT ON THIS DRAWING.

SAMPLE DSA 103 STATEMENT OF STRUCTURAL TESTS AND INSPECTION FORMS FOR CANTILEVER AND SINGLE POST UNITS	---	1
SAMPLE DSA 103 STATEMENT OF STRUCTURAL TESTS AND INSPECTION FORMS FOR ALL UNITS EXCEPT CANITLEVER AND SINGLE POST	---	2

IDENTIFICATION STAMP
DIV. OF THE STATE ARCHITECT
APP. 04-118151 INC:
REVIEWED FOR
SS ☑ FLS ☑ ACS ☑
DATE: 05.22.19

THESE PLANS AND SPECIFICATIONS ARE THE PROPERTY OF USA SHADE AND FABRIC STRUCTURES AND SHALL NOT BE REPRODUCED WITHOUT THEIR WRITTEN PERMISSION.

USA SHADE & Fabric Structures

CORPORATE HEADQUARTERS
8505-A CHANCELLOR ROW
DALLAS, TX, 75247
800-966-5005

CERTIFICATIONS:
IAS CERTIFICATION No: FA-428
CLARK COUNTY MANUFACTURER CERTIFICATION NUMBER (NEVADA): 355

CUSTOMER:
San Rafael City Schools

PROJECT NAME:
Terra Linda High School

LOCATION:
320 Nova Albion Way
San Rafael, CA 94903

MODEL NUMBER: SEE SELECTION

LICENSED ARCHITECT TIMOTHY J. HIGGINSON NO.C19106 REN. 10-31-19 STATE OF CALIFORNIA

HIGGINSON ARCHITECTS INCORPORATED
707 Brookside Avenue
Redlands, CA 92373
(909)375-3030
www.haarchinc.com

ARCHITECT

REGISTERED PROFESSIONAL ENGINEER MARK ALBERT LOWE No. 5693 STRUCTURAL STATE OF CALIFORNIA
5/21/19

Mark Lowe, S.E.
Structural Engineer

19471 Misty Ridge Lane
Trabuco Canyon, California 923679
949-400-1265
malowe@me.com

ENGINEER

DSA PRE-CHECK
SHADE
STRUCTURES

P.C. 04-118151
(REVISIONS TO 04-117219)

PRE-CHECK (PC) DOCUMENT
Code : 2016 CBC
A separate project application for construction is required.

Eng. By :	DWH	05/22/19
Design By :	DWH	05/22/19
Approved By :	DWH	05/22/19

DRAWING DESCRIPTION:
DSA 103 FORMS

SHEET
P.C. T-2.0

GENERAL NOTES

DESIGN LOADS

BUILDING CODE	CBC 2016 (BASED ON IBC 2015)
LIVE LOADS	5 PSF
SNOW LOAD	5 PSF
WIND LOADS	115 MPH (3-Sec. Gust); EXPOSURE C; TOPOGRAPHIC FACTOR , Kzt = 1.0

1.- SPECIAL INSPECTION REQUIREMENTS SHALL FOLLOW THE ATTACHED SAMPLE TEST AND INSPECTION LIST (T & I LIST) APPROVED BY DSA. THE SHOP WELDING INSPECTION SHALL INCLUDE WELDING OF ALL STEEL MEMBERS AND IDENTIFICATION OF STEEL THROUGH MILL CERTIFICATE OR MATERIAL TESTING, UNCERTIFIED STEEL SHALL BE TESTED TO THE REQUIREMENTS OF CBC 2016 CHAPTER 17A. THE FIELD SPECIAL INSPECTION SHALL INCLUDE COMPRESSION CYLINDER TESTS FOR THE CONCRETE FOUNDATION.

2.- STRUCTURE SHALL BE IN THE LOCATION SHOWN ON THE SITE SPECIFIC DSA APPLICATION DRAWING.

3.- FOUNDATION DESIGN BASED ON CBC 2016, TABLE 1806A.2, SOIL CLASS 5 (ALLOWABLE FOUNDATION PRESSURE 1500 PSF)

4.- DESIGN PER FOLLOWING CODES: CBC 2016, ASCE 7-10, AISC 360-10, AISC 341-10, ACI 318-14, ASCE 55-10 & ASCE 19-10

STRUCTURAL STEEL

1.- FABRICATION OF THE STEEL STRUCTURES SHALL BE PERFORMED BY USA SHADE OR AN AUTHORIZED LICENSEE. MATERIAL TESTING (OR MILL CERTIFICATES) AND INSPECTION OF WELDING SHALL BE CONDUCTED PER CBC 2016 SECTIONS 1704A, 1705A, 1705A.2, AND TABLE 1705A.2.1.

2.- ONLY CALIFORNIA LICENSED CONTRACTORS AUTHORIZED BY USA SHADE SHALL INSTALL THE SHADE STRUCTURES.

3.- ALL WORK SHALL CONFORM TO CBC 2016 EDITION, TITLE 24, CALIFORNIA CODE OF REGULATIONS (CCR).

4.- ALL GALVANIZED STEEL TUBE PRODUCTS MANUFACTURED BY ALLIED TUBE & CONDUIT FOR THIS STRUCTURE SHALL BE, AND CONFORM TO ASTM A500-10: GRADE "B", IN ITS' ENTIRETY.
TYPICAL MECHANICAL PROPERTIES ARE:
ROUND TUBE 42,000 PSI YIELD STRESS / 58,000 PSI TENSILE STRESS

5.- ALL STRUCTURAL SHAPES SHALL BE COLD FORMED HSS ASTM A500 GRADE B, UNLESS OTHERWISE NOTED. TYPICAL MECHANICAL PROPERTIES ACHIEVED FOR HSS PRODUCTS:
SQUARE AND RECTANGULAR 46,000 PSI YIELD STRESS / 58,000 PSI TENSILE STRESS
ROUND PIPE 42,000 PSI YIELD STRESS / 58,000 PSI TENSILE STRESS

6.- ALL PLATES PRODUCTS SHALL COMPLY WITH ASTM A572 GRADE 50.

7.- STRUCTURAL STEEL SHALL BE DETAILED, FABRICATED AND ERECTED IN ACCORDANCE WITH A.I.S.C. SPECIFICATIONS.

8.- ALL WELDING TO CONFORM WITH AMERICAN WELDING SOCIETY STANDARDS AND SHALL BE INSPECTED BY AN AWS/CWI INSPECTOR. AWS D1.1 FOR HOT ROLLED. AWS D1.3 FOR SHEET/COLD FORMED. AWS D1.8 SEISMIC SUPPLEMENT.

9.- ALL FULL PENETRATION WELD SHALL BE CONTINUOUSLY INSPECTED PER AWS D1.1 & D1.8.

10.- SHOP CONNECTIONS SHALL BE WELDED UNLESS NOTED OTHERWISE. FIELD CONNECTIONS SHALL BE AS INDICATED ON THE DRAWINGS (IF REQUIRED). ALL FILLET WELDS SHALL BE A MINIMUM OF 3/16" ER70SX ELECTRODES UNLESS OTHERWISE NOTED. EITHER SMAW OR GMAW IS ACCEPTABLE.

11.- ALL STAINLESS STEEL BOLTS SHALL COMPLY WITH ASTM F-593, FYS = 60 KSI, FS = 95KSI ,ALLOY GROUP 1 OR 2 ALL NUTS SHALL COMPLY WITH ASTM F-594 ALLOY GROUP 1 OR 2. REFERRING TO RCSC, ASTM F-593 IS NOT CONSIDERED AS HIGH STRENGTH BOLTS.

12.- ALL HIGH STRENGTH BOLTS SHALL COMPLY WITH ASTM A325 N (GALVANIZED). ALL NUTS SHALL COMPLY WITH ASTM A563DH, AND WASHERS SHALL COMPLY WITH ASTM F436.

13.- HIGH STRENGTH BOLTS ITEM 11 SHALL BE TIGHTENED TO A SNUG TIGHT CONDITION.

14.- HIGH STRENGTH BOLTS ITEM 7 SHALL BE TIGHTENED TO A PRE-TENSIONED (PT) CONDITION.
PER TABLE 4.1 OF SPECIFICATION FOR STRUCTURAL JOINTS USING HIGH STRENGTH BOLTS (RCSC 2010), ITEM 7 SHALL BE INSTALLED PER SECTION 8.2 AND INSPECTED PER SECTION 9.2. FAYING SURFACE CLASS A OR B IS NOT REQUIRED. SPECIFIED MINIMUM PRE-TENSION IS 51 KIPS. TESTING AND INSPECTION IS REQUIRED PER DSA-103 18D PT-FULLY PRE-TENSIONED CONNECTIONS.

15.- ALL STRUCTURAL STEEL (ITEMS FROM NOTE 5) SHALL BE PAINTED WITH ONE SHOP COAT (2.5 TO 3.5 MILS THICK MIN) OF ZINC-RICH PRIMER, UNDERCOAT, AND FINISH COAT, OR EQUIVALENT PAINT SYSTEM. THIS COAT IS A WEATHER RESISTANT POWDER COATING BASED ON POLYESTER TGIC (MANUFACTURED BY SHERWIN WILLIAMS OR TIGER DRYLAC). TO ACHIEVE OPTIMUM ADHESION, IT IS RECOMMENDED THAT THE PROPER TREATMENT AND DRYING TAKE PLACE BEFORE COATING. POLYESTER POWDER (TGIC) SPECIFICATIONS SHALL BE AS FOLLOWS: - PENCIL HARDNESS (ASTM D-3363). - HUMIDITY (ASTM D-2247).
- SOLVENT RESISTANCE (PCI METHOD) - 50 DBL RUBS SL. SOFTNESS.

16.- ALL STEEL ROUND TUBING (ITEMS FROM NOTE 4) SHALL BE TRIPLE COATED FOR RUST PROTECTION USING THE IN-LINE ELECTROPLATING COAT PROCESS. TUBING SHALL BE INTERNALLY COATED WITH ZINC AND ORGANIC COATINGS TO PREVENT CORROSION AS MANUFACTURED BY ALLIED TUBE & CONDUIT.

17.- COLD-FORMED STEEL MEMBERS SHALL BE 55% ALUMINUM ZINC ALLOY COATED PER ASTM A792/A792M STANDARD IN ACCORDANCE TO AISI S200 TABLE A4-1, CP 90 COATING DESIGNATION. ALL EXPOSED STEEL FASTENERS, INCLUDING CAST-IN-PLACE ANCHOR BOLTS/RODS, SHALL BE STAINLESS STEEL (TYPE 304 MINIMUM), HOT DIP GALVANIZED (ASTM A153, CLASS D MINIMUM OR ASTM F2329), OR PROTECTED WITH CORROSION PREVENTIVE COATING THAT DEMONSTRATED NO MORE THAN 2% OF RED RUST IN MINIMUM 1,000 HOURS OF EXPOSURE IN SALT SPRAY TEST PER ASTM B117. ZINC-PLATED FASTENERS DO NOT COMPLY WITH THIS REQUIREMENT.

CONCRETE SPECIFICATION

1.- CONCRETE SHALL BE TESTED PER CBC 2016 SECTION 1903A & SHALL BE INSPECTED PER SECTION 1903A.

2.- CONCRETE TO BE F'c= 4500 PSI, TYPE V CEMENT, WATER/CEMENT RATIO OF 0.45, PER ACI 318-14 CHAPTER 5. REINFORCING STEEL TO BE Fy= 60000 PSI , MIN. GR. 60

3.- ALL ANCHOR BOLTS SET IN NEW CONCRETE (WHEN APPLICABLE) SHALL COMPLY WITH ASTM F-1554 GRADE 55 (GALVANIZED). ANCHOR BOLT'S EMBEDMENT NEEDS TO BE AS FOLLOW:
A) ANCHOR BOLT Ø1 1/4" 30 IN (MINIMUM EMBEDMENT)

4.- CERTIFIED MILL TEST REPORTS ARE TO BE PROVIDED FOR EACH SHIPMENT OF REINFORCEMENT.

5.- ALL NON-SHRINK GROUT SHALL HAVE A MINIMUM 28 DAYS COMPRESSIVE STRENGTH OF 5000 PSI, AND SHALL COMPLY THE REQUIREMENTS OF ASTM C109, ASTM C939, ASTM C1090, ASTM C1107, WHEN APPLICABLE.

FABRIC SPECIFICATION

1.- FABRIC SHALL BE MANUFACTURED BY MULTIKNIT LTD. OR OTHER COMPANY WHO CAN MANUFACTURE FABRIC, WHICH MEETS THE SPECIFICATIONS LISTED ON PAGE 2000, AND SHALL BE FABRICATED FROM POLYETHYLENE MATERIALS.

2.- THE FABRIC SHALL RETAIN 80% OF ITS TENSILE AND TEARING STRENGTH AFTER ULTRAVIOLET EXPOSURE PER ASTM G53 USING A 313 NM LIGHT SOURCE FOR 500 HOURS WHILE MOISTENED FOR 1 HOUR EVERY 12 HOURS.

3.- PROVIDE CERTIFICATION BY MANUFACTURER AND STATE FIRE MARSHAL TO DSA AT SITE SPECIFIC INSTALLATION.

4.- FABRIC SHALL REQUIRE ANNUAL INSPECTION AND MAINTENANCE BY THE DISTRICT. FABRICS SAMPLES OF THE SAME MATERIAL WHICH ARE MAINTAINED AT THE PROJECTS SITE SHALL BE TESTED TO BE IN COMPLIANCE WITH ASTM D5034 AND D2261. THE ANNUAL TESTING ON THE APPROVED PLANS SHALL BE COMPARED TO THE FABRIC SPECIFICATIONS INDICATED IN NOTE 1 OF "FABRIC SPECIFICATION" ON THE APPROVED PLANS. THE FABRIC SHALL BE REPLACED WHEN THE TEST RESULTS RETURN LESS THAN 50% OF THE ULTIMATE VALUES IN NOTE 1 OF "FABRIC SPECIFICATION".

5.- FABRIC TOP NEEDS TO BE REMOVED IF SNOW EXCEEDING 5 PSF ARE ANTICIPATED, FABRIC TOP NEEDS TO BE REMOVED IF WINDS EXCEEDING 115 MPH ARE ANTICIPATED.

6.- A VISUAL INSPECTION LOOKING FOR TEAR AND ABNORMAL WEAR IN FABRIC MATERIAL AND THREAD IS REQUIRED PRIOR TO RE-INSTALLATION. SHADE STRUCTURE SHALL BE NOTIFIED IF SIGNIFICANT DAMAGE IS PRESENT BEFORE RE-INSTALLATION.

AIRCRAFT CABLE

1.- FOR FABRIC ATTACHMENT USE 1/4" 7x19 GALV. CABLE PER ASTM A1023A, ASTM 1023M-02, WITH A BREAKING STRENGTH VALUE OF 7,000 LBS. CABLE SHALL BE TENSIONED TO 250 LBS MINIMUM. THE MAXIMUM CALCULATED CABLE TENSION IS 1321 LB.

2.- CABLES SHALL BE FED THROUGH THE FABRIC SLEEVES AROUND THE PERIMETER OF THE CANOPY AND TENSIONED UNTIL THE FABRIC PANELS (DESIGNED PURPOSELY UNDERSIZED) REACH A TAUT APPEARANCE. ANY LONG TERM CABLE SAG SHALL BE MINIMIZED DURING THE MAINTENANCE RE-TIGHTING VISITS AS REQUIRED.

2016 CBC PC DESIGN NOTES

FLOOR LIVE LOAD N/A
ROOF LIVE LOAD RLL 5 PSF

ALLOWABLE SOIL PRESSURE:
DL + LL (CONC FTG) 1500 PSF
DL + LL + SEISMIC (CONC FTG) 1500 PSF
LATERAL BEARING DESIGN VALUE 100 PSF/FT BELOW NATURAL GRADE, PER TABLE 1806A.2
TWO TIMES THE TABULAR VALUE IS USED (200 PSF/FT) PER CBC SECTION 1806A.3.4.
ALLOWABLE PIER FRICTIONAL RESISTANCE 250 PSF MAXIMUM BASED ON SECTION 1810A.3.3.1.4 (ONE-SIXTH OF THE BEARING VALUE).
UPLIFT FRICTIONAL RESISTANCE HAVE A SAFETY FACTOR OF 3.

ROOF SNOW LOAD 5 PSF

FLOOD HAZARD AREA NO
WHEN A SITE SPECIFIC PROJECT IS LOCATED IN A FLOOD ZONE OTHER THAN ZONE X, A LETTER STAMPED AND SIGNED FROM A SOILS ENGINEER IS NEEDED TO VALIDATE THE ALLOWABLE SOIL VALUES SPECIFIED IN THE PC ARE STILL APPLICABLE.

WIND DESIGN DIRECTIONAL PROCEDURE: ASCE 7-10, SECTION 27.4.3

-ULTIMATE DESIGN WIND SPEED (3 SEC GUST)	V	115 MPH
-WIND EXPOSURE FACTOR	C	
-TOPOGRAPHIC FACTOR	Kzt	1
-RISK CATEGORY	II	
-VELOCITY PRESSURE EXPOSURE COEFFICIENT	Kz	0.85
-VELOCITY PRESSURE	qz	24.46 PSF

SEISMIC DESIGN:

-SITE CLASS	D	
	SS	3.00g
	S1	1.389g
-SPECTRAL RESPONSE COEFFICIENTS	SDS	2.00
	SD1	1.39

-LATERAL FORCE RESISTING SYSTEM G.2 ORDINARY CANTILEVERED COLUMN SYSTEM.

-SEISMIC IMPORTANCE FACTOR	I	1.0
-DESIGN BASE SHEAR	V	2133 LB
-SEISMIC RESPONSE COEFFICIENTS	Cs	1.6
-RESPONSE MODIFICATION FACTOR	R	1.25
-ANALYSIS PROCEDURE	EQUIVALENT LATERAL FORCE	
-RISK CATEGORY	II	
-SEISMIC DESIGN CATEGORY		E
-SITE COEFFICIENT CATEGORY	Fa=1	Fv=1.5

GEOHAZARD REPORT IS NOT REQUIRED FOR OPEN FABRIC STRUCTURES 1,600 SQF OR LESS COMPLYING WITH THE REQUIREMENTS OF IR A-4 SECTION 3.1.1. OPEN FABRIC SHADE STRUCTURES GREATER THAN 1,600 SQUARE FEET UP TO A MAXIMUM OF 4,000 SQUARE FEET AND COMPLYING WITH THE REQUIREMENTS NOTED IN IR A-4 SECTION 3.1.1 DO NOT REQUIRE A GEOHAZARD REPORT PROVIDED A GEOTECHNICAL REPORT INDICATES THAT NO LIQUEFACTION POTENTIAL EXISTS.

ARCHITECT OF RECORD TO DETERMINE IF SPECIFIC SITE IS IN GEOLOGIC HAZARD ZONE. GEOHAZARD REPORT REQUIREMENTS PER DSA IR A-4.

PC OPTIONS SHALL NOT INCLUDE LIQUEFIABLE SOIL (EXCEPTION: OPEN FABRIC SHADE STRUCTURES 1,600 SQUARE FEET OR LESS COMPLYING WITH REQUIREMENTS OF IR A-4 SECTION 3.1.1). IF STRUCTURE IS LOCATED IN AN AREA WITH LIQUEFIABLE SOIL OR SITE CLASS F, OVER-THE-COUNTER SUBMITTAL IS NOT ALLOWED AND REGULAR PROJECT SUBMITTAL IS REQUIRED. IF SITE IS NOT IN A MAPPED LIQUEFACTION HAZARD ZONE, IT MAY BE PRESUMED THAT NO LIQUEFACTION HAZARD EXISTS ON THAT SITE UNLESS A SITE-SPECIFIC GEOTECHNICAL REPORT IDENTIFIES SUCH HAZARD.

MINIMUM FOUNDATION SETBACK LIMIT IN ADJACENT SLOPE: THE DEPTH OF REQUIRED PIER EMBEDMENT SHALL START FROM AN ELEVATION THAT CORRESPONDS WITH A HORIZONTAL CLEAR DISTANCE OF 14 FEET THAT INTERSECT WITH THE SLOPE (DAYLIGHTING). IF SETBACK LIMITS ARE SMALLER THAN CBC REQUIRES, A SITE-SPECIFIC SOILS REPORT IS REQUIRED.

MINIMUM CLASS 2 PROJECT INSPECTOR REQUIRED.

DETAIL 1
REFER TO TOP VIEW

VIEW-A-A
REFER TO DETAIL-1

VIEW B-B
REFER TO DETAIL-2

VIEW C-C
REFER TO VIEW B-B

TOP VIEW
(SCHEMATIC VIEW ONLY)

LIST OF MATERIALS			
ITEM	QTY	DESCRIPTION	MATERIAL
1	1	COLUMN	HSS 8.625x0.322
2	1	CROWN	HSS 8.625x0.322
3	4	RAFTER	HSS 5.563x0.258
4	1	FABRIC TOP	FR COLOURSHADE Z25
5	4	Ø1/4" CABLE	GALVANIZED STEEL
6	16	Ø1/4" CABLE CLAMP	GALVANIZED
7	6	Ø1"-8NC x 4" HEX BOLT	ASTM A325 GALVANIZED
8	6	Ø1"-8NC HEX NUT	ASTM A563 GALVANIZED
9	6	Ø1" SPLIT LOCK WASHER	ASTM F436 GALVANIZED
10	12	Ø1" FLAT WASHER	ASTM F436 GALVANIZED
11	4	Ø3/4"-10NC x 7" HEX BOLT	ASTM A325 GALVANIZED
12	4	Ø3/4"-10NC HEX NUT	ASTM A563 GALVANIZED
13	4	Ø3/4" SPLIT LOCK WASHER	ASTM F436 GALVANIZED
14	8	Ø3/4" FLAT WASHER	ASTM F436 GALVANIZED
15	4	3/4" x 6" JAW END	GALVANIZED
16	4	3/4" FLAT WASHER	GALVANIZED
17	4	3/4"-10NC HEX NUT	GALVANIZED
18	4	3/4"-10NC JAM NUT	GALVANIZED
19	4	3/4" SPHERICAL WASHER+CUP	GALVANIZED
20	4	5/8" QUICK LINK	ZINC PLATED
21	8	Ø1/4" THIMBLE	GALVANIZED

CODE ANALYSIS					
BUILDING	OCCUPANCY	CONST. TYPE	AREA (SQ. FT.)	OCCUPANT LOAD FACTOR	OCCUPANT LOAD
SHADE STRUCTURE					

MAXIMUM OCCUPANT LOAD (PER CBC 2016 TABLE 1604A.5)
-K-12: 250 PERSONS
-PUBLIC ASSEMBLY: 300 PERSONS
-EDUCATIONAL OCCUPANCIES ABOVE 12TH GRADE: 500 PERSONS

FRONT & SIDE VIEW
(SCHEMATIC VIEW ONLY)

DETAIL 2
REFER TO TOP VIEW

DRILLED PIER FOOTING-PIH
(EMBEDDED, PIH)
(USE FOR NON-CONSTRAINED CASES)

DRILLED PIER FOOTING-RBP
(RECESSED BASE PLATE, RBP)
(USE FOR NON-CONSTRAINED CASES)
(OPTIONAL)

ALTERNATE SPREAD FOOTING
(EMBEDDED, PIH)
(OPTIONAL)

ALTERNATE SPREAD FOOTING
(RECESSED BASE PLATE, RBP)
(OPTIONAL)

Ø1/4" CABLE ASSEMBLY
(TYPICAL)

CAP PLATE
(3/4" THK)
(BOTTOM OF PIH COLUMNS)

5/21/19

IDENTIFICATION STAMP
DIV. OF THE STATE ARCHITECT
APP. 04-118151 INC:
REVIEWED FOR
SS ☑ FLS ☑ ACS ☑
DATE: 05.22.19

THESE PLANS AND SPECIFICATIONS ARE THE PROPERTY OF USA SHADE AND FABRIC STRUCTURES AND SHALL NOT BE REPRODUCED WITHOUT THEIR WRITTEN PERMISSION.

USASHADE & Fabric Structures
CORPORATE HEADQUARTERS
800-966-5005

CERTIFICATIONS:
IAS CERTIFICATION No: FA-428
CLARK COUNTY MANUFACTURER CERTIFICATION NUMBER (NEVADA): 355

CUSTOMER:
San Rafael City Schools

PROJECT NAME:
Terra Linda High School

LOCATION:
320 Nova Albion Way
San Rafael, CA 94903

MODEL NUMBER:
DSA1032020-16

STRUCTURE TYPE:
SINGLE POST PYRAMID DSA

SIZE: MAXIMUM
20' x 20 x 12'e MAX.

SCALE : NONE

DRAWING SIZE: D

PRE-CHECK (PC) DOCUMENT
Code : 2016 CBC
A separate project application for construction is required.

Eng. By :	JO	03/12/18
Design By :	MP	03/12/18
Approved By :	JO	03/12/18

DRAWING DESCRIPTION:
PRODUCT INFORMATION

DWG. DSA1032020-16

SHEET 16.1-1000

REV. NC

ENVELOPE JOINT REACTIONS

Shear resultant = $\sqrt{Px^2 + Py^2 + Pz^2}$ Moment resultant = $\sqrt{Mx^2 + My^2 + Mz^2}$

ASD REACTIONS

Node No.		Support Forces [kip] P_x	P_y	P_z	Support Moments [kipft] M_x	M_y	M_z		Support Forces [kip] SHEAR RESULTANT	Support Moments [kipft] MOMENT RESULTANT	Support Forces [kip] UPLIFT	Support Forces [kip] AXIAL
						MAXIMUM REACTIONS			1.955	25.166	0.855	-3.862
Node No.		Support Forces [kip] P_x	P_y	P_z	Support Moments [kipft] M_x	M_y	M_z					
137	Max	1.955	1.955	0.855	0.130	25.166	0.002					
	Min	-0.010	0.000	-3.862	-25.166	-0.141	-0.078					
	Max P_x	**1.955**	0.000	-0.430	0.000	25.033	0.000	CO 18	1.955	25.033		-0.430
	Min P_x	**-0.010**	0.803	-2.454	-5.062	-0.141	-0.078	CO 32	0.803	5.064		-2.454
	Max P_y	0.000	**1.955**	-0.430	-25.033	0.000	0.000	CO 19	1.955	25.033		-0.430
	Min P_y	1.504	**0.000**	-1.343	0.000	19.329	0.000	CO 25	1.504	19.329		-1.343
	Max P_z	-0.001	0.613	**0.855**	-3.760	-0.009	0.002	CO 34	0.613	3.760	0.855	
	Min P_z	-0.004	0.547	**-3.862**	-3.189	-0.072	-0.037	CO 11	0.547	3.190		-3.862
	Max M_x	0.000	0.253	-1.485	**0.130**	-0.007	-0.002	CO 13	0.253	0.130		-1.485
	Min M_x	0.000	1.955	-1.719	**-25.166**	0.000	0.000	CO 17	1.955	25.166		-1.719
	Max M_y	1.955	0.000	-1.719	0.000	**25.166**	0.000	CO 16	1.955	25.166		-1.719
	Min M_y	-0.010	0.803	-2.454	-5.062	**-0.141**	-0.078	CO 32	0.803	5.064		-2.454
	Max M_z	-0.001	0.613	0.855	-3.760	-0.009	**0.002**	CO 34	0.613	3.760	0.855	
	Min M_z	-0.010	0.803	-2.454	-5.062	-0.141	**-0.078**	CO 32	0.803	5.064		-2.454

Forged Single-Saddle Wire Rope Clamps—Not for Lifting

A forged fabrication allows these to be used in critical applications such as tie downs and support lines. They must be oriented with the saddle on the long (live) end and U-bolt on the short (dead) end. Also known as wire rope clips.

Galvanized steel clamps have a thick coating for corrosion resistance.

316 stainless steel clamps are the most corrosion resistant fittings we offer. They provide excellent resistance to salt water and chemicals.

Warning: Test all assemblies for required strength before use. Do not use with coated rope unless the coating is removed.

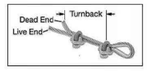

For Rope Dia.	No. of Clamps Required	Rope Turnback	Required Torque, ft.-lbs.	Clamp Ht.	Clamp Wd.	Clamp Thick.	Capacity	Specifications Met
Galvanized Steel								
1/8"	2	3 1/4"	4.5	1 1/8"	1"	13/16"	80% of the Rope's Capacity	—
3/16"	2	3 3/4"	7.5	1 1/2"	1 3/16"	1"	80% of the Rope's Capacity	—
1/4"	2	4 3/4"	15	1 3/4"	1 7/16"	1 1/4"	80% of the Rope's Capacity	Fed. Spec. FF-C-450
5/16"	2	5 1/4"	30	2 1/8"	1 11/16"	1 5/16"	80% of the Rope's Capacity	Fed. Spec. FF-C-450
3/8"	2	6 1/2"	45	2 7/16"	2"	1 15/16"	80% of the Rope's Capacity	Fed. Spec. FF-C-450
7/16"	2	7"	65	3 1/16"	2 5/16"	1 15/16"	80% of the Rope's Capacity	Fed. Spec. FF-C-450
1/2"	3	11 1/2"	65	3 1/16"	2 5/16"	1 15/16"	80% of the Rope's Capacity	Fed. Spec. FF-C-450
9/16"	3	12"	95	3 5/8"	2 1/2"	2 1/16"	80% of the Rope's Capacity	Fed. Spec. FF-C-450
5/8"	3	12"	95	3 5/8"	2 1/2"	2 1/16"	80% of the Rope's Capacity	Fed. Spec. FF-C-450
3/4"	4	18"	130	4 3/16"	2 7/8"	2 1/4"	80% of the Rope's Capacity	Fed. Spec. FF-C-450
7/8"	4	19"	225	4 3/4"	3 3/16"	2 1/2"	80% of the Rope's Capacity	Fed. Spec. FF-C-450
1"	5	28"	225	5 5/16"	3 1/2"	2 11/16"	90% of the Rope's Capacity	Fed. Spec. FF-C-450
1 1/8"	6	34"	225	5 13/16"	3 5/8"	2 13/16"	90% of the Rope's Capacity	Fed. Spec. FF-C-450
1 1/4"	7	44"	360	6 5/8"	4 3/16"	3 3/16"	90% of the Rope's Capacity	Fed. Spec. FF-C-450
1 3/8"	7	44"	360	6 3/4"	4 1/4"	3 3/16"	90% of the Rope's Capacity	Fed. Spec. FF-C-450
1 1/2"	8	54"	360	7 7/16"	4 1/2"	3 7/16"	90% of the Rope's Capacity	Fed. Spec. FF-C-450

Aircraft Cable

Preformed, made in accordance with commercial specifications military and federal specification rope available.

Carbon Steel (Aircraft Cable) - Galvanized cable has the highest strength and greatest fatigue life of the materials offered. It has good to fair corrosion resistance in rural to industrial atmosphere environments. This material is most widely used for small diameter cables. Tin over galvanized cable offers greater corrosion resistance and reduced friction over pulleys.

7 x 19

7 x 19 Dia. (in)	Approx. Wt 1000 Ft/lbs	Galvanized Min. Breaking Strengths (lbs)
3/32	17.	1,000
1/8	29.	2,000
5/32	45.	2,800
3/16	65.	4,200
7/32	88.	5,600
1/4	110.	7,000
9/32	139.	8,000
5/16	173.	9,800
3/8	243.	14,400

IDENTIFICATION STAMP
DIV. OF THE STATE ARCHITECT
APP. 04-118151 INC:
REVIEWED FOR
SS ☑ FLS ☑ ACS ☑
DATE: 05.22.19

THESE PLANS AND SPECIFICATIONS ARE THE PROPERTY OF USA SHADE AND FABRIC STRUCTURES AND SHALL NOT BE REPRODUCED WITHOUT THEIR WRITTEN PERMISSION.

USASHADE & Fabric Structures
CORPORATE HEADQUARTERS
8505-A CHANCELLOR ROW
DALLAS, TX, 75247
800-966-5005

CERTIFICATIONS:
IAS CERTIFICATION No: FA-428
CLARK COUNTY MANUFACTURER CERTIFICATION NUMBER (NEVADA): 355

CUSTOMER:
San Rafael City Schools

PROJECT NAME:
Terra Linda High School

LOCATION:
320 Nova Albion Way
San Rafael, CA 94903

MODEL NUMBER:
DSA1032020-16

STRUCTURE TYPE:
SINGLE POST PYRAMID DSA

SIZE: MAXIMUM
20' x 20 x 12'e MAX.

SCALE : NONE

DRAWING SIZE: **D**

PRE-CHECK (PC) DOCUMENT
Code : 2016 CBC
A separate project application for construction is required.

Eng. By :	JO	03/12/18
Design By :	MP	03/12/18
Approved By :	JO	03/12/18

DRAWING DESCRIPTION:
REACTIONS

DWG. **DSA1032020-16**

SHEET **16.2-2000**

REV. **NC**

5/21/19

Multiknit INTERNATIONAL — 190/F5 Fire rated specifications

Standard range

Revision 0 28-Oct-12

Colour	Shade %	LV Block %	Average GSM	Average Warp break strength kgs	Average Elongation %	Average Weft break strength kgs	Average Elongation %	Average Burst Kpa	Average Burst to Mass ratio
Desert Sand	80	93	185	50	40	72	73	156	0.84
Blue	80	85	185	50	40	72	73	156	0.84
Brown	85		185	50	40	72	73	156	0.84
Green	80	85	185	50	40	72	73	156	0.84
Red	80	86	185	50	40	72	73	156	0.84
Silver	80	81	185	50	40	72	73	156	0.84
Terracotta	75	82	185	50	40	72	73	156	0.84
Yellow	80	89	185	50	40	72	73	156	0.84
				110 LB		159 LB		3258 PSF	

CONVERSION TO IMPERIAL UNITS:
185 GSM = .0378 psf
50 KGS = 110 Lb
72 KGS = 159 Lb
156 Kpa = 3258 psf

Notes:
- 190/F5 conforms to The California State Fire Marshal Title 19 Test for Small scale Fabrics
- Tear tests are done using a 50mm wide strip and a cross head speed of 500mm/min
- This report has been compiled using the mean results from all tests conducted on the given sample by our Quality Control Laboratory, the information provided is considered to be a good reflection of the reavant properties of the fabric tested. These results must only be used as an indication of the quality and characteristics of the fabric tested.
- Company cannot be held responsible or liable in any way whatsoever should this information differ to that of a registered testing institution.

Deon Joubert
General Manager - Multiknit (Pty) Ltd

Tommy Rogers
Managing Director - Multiknit (Pty) Ltd

Leveling Washers

Also known as spherical washers, these consist of a male and female washer that, when nested, swivel slightly to compensate for tolerance variations and uneven surfaces. They're good for die and fixturing applications.

Two Piece (Male and Female)

Black-oxide steel washers are mildly corrosion resistant in dry environments.

CAD For technical drawings and 3-D models, click on a part number.

Washers — For Screw Size	Male ID (A)	Male OD (B)	Male Radius	Female ID (C)	Female OD (D)	Female Radius	Thick. (E)	Max. Angle of Correction	Hardness
Black-Oxide Steel									
No. 4	0.116"	0.281"	0.031"	0.156"	0.375"	—	0.188"-0.218"	3°	Rockwell C48
No. 6	0.144"	0.281"	0.031"	0.172"	0.375"	—	0.188"-0.218"	3°	Rockwell C48
No. 8	0.169"	0.312"	0.031"	0.188"	0.375"	—	0.188"-0.218"	3°	Rockwell C48
No. 10	0.196"	0.375"	0.078"	0.219"	0.438"	—	0.219"-0.249"	3°	Rockwell C48
1/4"	0.257"	0.438"	0.109"	0.281"	0.500"	—	0.251"-0.281"	3°	Rockwell C48
1/4"	0.281"	0.625"	0.750"	0.281"	0.625"	0.750"	0.173"-0.203"	5°	Rockwell C48
5/16"	0.323"	0.500"	0.063"	0.344"	0.562"	—	0.312"-0.344"	3°	Rockwell C48
3/8"	0.386"	0.625"	0.094"	0.406"	0.688"	—	0.407"-0.438"	3°	Rockwell C48
3/8"	0.406"	0.875"	1.250"	0.406"	0.875"	1.250"	0.235"-0.265"	3°	Rockwell C48
1/2"	0.531"	1.125"	1.500"	0.531"	1.125"	1.500"	0.298"-0.328"	2°	Rockwell C48
5/8"	0.656"	1.375"	1.750"	0.656"	1.375"	1.750"	0.298"-0.328"	2°	Rockwell C48
3/4"	0.781"	1.625"	2.250"	0.781"	1.625"	2.250"	0.360"-0.390"	3°	Rockwell C48
7/8"	0.938"	1.750"	2.500"	0.969"	1.750"	2.500"	0.360"-0.390"	3°	Rockwell C48
1"	1.062"	2.000"	2.750"	1.094"	2.000"	2.750"	0.485"-0.515"	3°	Rockwell C48
1 1/8"	1.188"	2.250"	3.000"	1.250"	2.250"	3.000"	0.485"-0.515"	3°	Rockwell C48
1 1/4"	1.312"	2.500"	3.000"	1.375"	2.500"	3.000"	0.485"-0.515"	3°	Rockwell C48
1 1/2"	1.562"	2.875"	3.000"	1.625"	2.875"	3.000"	0.485"-0.515"	3°	Rockwell C48
1 5/8"	1.688"	3.250"	3.500"	1.750"	3.250"	3.500"	0.673"-0.703"	3°	Rockwell C48
1 3/4"	1.812"	3.250"	3.500"	1.875"	3.250"	3.500"	0.673"-0.703"	3°	Rockwell C48
2"	2.062"	3.875"	3.500"	2.125"	3.875"	3.500"	0.735"-0.765"	3°	Rockwell C48

Delta Maillon rapide

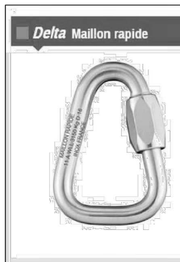

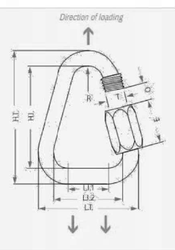

Delta shape: developed after the ever-increasing development of webbing-fitted systems; perfect for webbing uphold ons its lower flat part.

Zinc plated steel | Other materials on all dimensions | Stainless steel | Zicral

Reference	Diameter mm	Diameter inches	Dimensions - mm L.T.	LI.1	LI.2	H.T.	H.I.	O	E	R	T	Weight g	WLL kg	BL kg	Quote Qty
MRDZ02.5	2,5	3/32"	22	10	17	27	22	3,5	8	3,5	3,5	3	25	125	
MRDZ03.0	3	7/64"	27	12,5	21	30	24	4	9	4,25	4	6	40	200	
MRDZ03.5	3,5	1/8"	31	14	24	36	29	5	11	5	5	9	70	350	
MRDZ04.0	4	5/32"	35,5	16	27,5	40	32	5,5	12,5	5,75	6	14	100	500	
MRDZ05.0	5	3/16"	40	17	30	48	38	6,5	16	6,5	7	23	150	750	
MRDZ06.0	6	1/4"	47	20,5	35	56	44	7,5	19	7,25	9	39	250	1250	
MRDZ07.0	7	9/32"	51	21	37	63	49	8,5	21,5	8	10	58	400	2000	
MRDZ08.0	8	5/16"	56	22,5	40	73	57	10	24	8,85	11	88	550	2750	
MRDZ09.0	9	3/8"	60	23	42	78	60	11	26	9,5	12	115	700	3500	
MRDZ10.0	10	7/16"	66	25,5	46	87	67	12	29	10,25	13	153	900	4500	
MRDZ12.0	12	1/2"	75	27,5	51	104	80	15	33	11,75	15	256	1100	5500	
MRDZ14.0	14	9/16"	85	30,5	57	123	95	17	38,5	13,25	17	404	1800	9000	
MRDZ16.0	16	5/8"	93	31,5	61	138	106	19	46	14,75	19	612	2200	11000	
MRDZ18.0	18	11/16"	102	32,5	66	155	119	23	52	16,25	22	845	2600	13000	
MRDZ20.0	20	25/32"	112	31,5	72	176	136	24	60	17,75	24	1185	3000	15000	

*WLL: Working load limit
*BL: Breaking load.

Other materials on all dimensions | Stainless steel | Zicral

5/8" QUICK LINK UNITS CONVERSION

LT [in]	LI1 [in]	LI2 [in]	HT [in]	HI [in]	O [in]	E [in]	R [in]	T [in]	WEIGHT [lb]	WORKING LOAD [lb]	BREAKING LOAD [lb]
3.661	1.240	2.402	5.433	4.173	0.748	1.772	0.581	0.748	1.35	4850	24250

BASIC LOAD CASES

DEAD LOAD	0.0378 PSF (FABRIC)
FLOOR LIVE LOAD	N/A
ROOF LIVE LOAD	5 PSF
ROOF SNOW LOAD	5 PSF
SUPERIMPOSED LOADS	N/A
WIND LOAD	
ULTIMATE DESIGN WIND SPEED (3 SEC GUST)	115 MPH
VELOCITY PRESSURE qz	24.46 PSF
COMPONENT AND CLADDING qz (CABLE AND CABLE HARDWARE ONLY)	24.46 PSF
SEISMIC LOAD	
SEISMIC RESPONSE COEFFICIENTS Cs	1.6
DESIGN BASE SHEAR	2133 LB

Turnbuckles - Jaw End Fittings

Jaw End Fittings

- Quenched and Tempered or Normalized.
- Hot dip galvanized steel.
- Forged jaw ends are fitted with bolts and nuts on sizes 1/4" through 5/8", and pins and cotters on sizes 3/4" through 2-3/4".
- Modified UNJ thread for improved fatigue properties.
- Fatigue Rated.

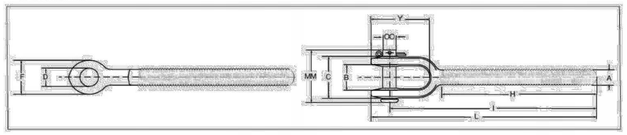

Jaw End Fittings

Shank Dia. & Take Up (in.)	RH Jaw Stock No.	LH Jaw Stock No.	Working Load Limit (lbs.)	Weight Each (lbs.)	Dimensions (in.) A	B	C	D	F	H	I Nom. Min.	L Nom. Min.	Y	MM	OO Bolt Pin
* 1/4 x 4	1072298	1072911	500	.11	.25	.45	.91	.30	.63	2.59	3.72	4.09	1.13	1.41	.25
* 5/16 x 4 1/2	1072314	1072999	800	.17	.31	.50	1.02	.30	.69	3.00	4.41	4.81	1.39	1.41	.25
* 3/8 x 6	1072332	1072957	1200	.28	.38	.53	1.15	.36	.81	3.88	5.28	5.75	1.47	1.58	.31
1/2 x 6	1072359	1072975	2200	.56	.50	.64	1.38	.42	1.00	4.19	6.51	7.07	1.81	1.87	.37
1/2 x 9	1072378	1072993	2200	.63	.50	.64	1.38	.42	1.00	5.69	8.01	8.57	1.81	1.87	.37
1/2 x 12	1072396	1073019	2200	.72	.50	.64	1.38	.42	1.00	7.19	9.51	10.07	1.81	1.87	.37
5/8 x 6	1072412	1073037	3500	1.05	.63	.79	1.75	.55	1.31	4.31	7.12	7.91	2.36	2.44	.50
5/8 x 9	1072430	1073055	3500	1.18	.63	.79	1.75	.55	1.31	5.81	8.62	9.41	2.36	2.44	.50
5/8 x 12	1072458	1073073	3500	1.31	.63	.79	1.75	.55	1.31	7.31	10.12	10.91	2.36	2.44	.50
3/4 x 6	1072476	1073091	5200	1.65	.75	.97	2.09	.69	1.63	4.56	7.86	8.84	2.81	2.56	.63
3/4 x 9	1072494	1073117	5200	1.84	.75	.97	2.09	.69	1.63	6.06	9.36	10.34	2.81	2.56	.63
3/4 x 12	1072519	1073135	5200	2.03	.75	.97	2.09	.69	1.63	7.56	10.86	11.84	2.81	2.56	.63
3/4 x 18	1072537	1073153	5200	2.41	.75	.97	2.09	.69	1.63	10.56	13.86	14.84	2.81	2.56	.63
7/8 x 12	1072555	1073171	7200	2.88	.88	1.16	2.56	.81	1.88	7.81	11.70	12.81	3.25	3.09	.75
7/8 x 18	1072573	1073199	7200	3.25	.88	1.16	2.56	.81	1.88	10.81	14.70	15.81	3.25	3.09	.75
1 x 6	1072591	1073215	10000	3.56	1.00	1.34	2.78	.94	2.12	5.06	9.35	10.59	3.73	3.44	.88
1 x 12	1072617	1073233	10000	4.22	1.00	1.34	2.78	.94	2.12	8.06	12.35	13.59	3.73	3.44	.88
1 x 18	1072635	1073251	10000	4.89	1.00	1.34	2.78	.94	2.12	11.06	15.35	16.59	3.73	3.44	.88
1 x 24	1072653	1073279	10000	5.56	1.00	1.34	2.78	.94	2.12	14.06	18.35	19.59	3.73	3.44	.88
1-1/4 x 12	1072671	1073297	15200	6.10	1.25	1.84	3.72	1.19	2.63	8.38	14.25	15.79	4.92	4.53	1.13
1-1/4 x 18	1072699	1073319	15200	9.14	1.25	1.84	3.72	1.19	2.63	11.38	17.25	18.79	4.92	4.53	1.13
1-1/4 x 24	1072715	1073331	15200	10.2	1.25	1.84	3.72	1.19	2.63	14.38	20.25	21.79	4.92	4.53	1.13
1-1/2 x 12	1072733	1073359	21400	12.3	1.50	2.06	4.15	1.47	3.12	8.75	15.07	16.84	5.27	5.13	1.38
1-1/2 x 18	1072751	1073377	21400	13.8	1.50	2.06	4.15	1.47	3.12	11.75	18.07	19.84	5.27	5.13	1.38
1-1/2 x 24	1072779	1073395	21400	15.3	1.50	2.06	4.15	1.47	3.12	14.75	21.07	22.84	5.27	5.13	1.38
1-3/4 x 18	1072810	1073439	28000	18.9	1.75	2.60	4.68	1.72	3.50	12.16	18.49	20.58	6.25	6.00	1.63
1-3/4 x 24	1072831	1073457	28000	21.0	1.75	2.60	4.68	1.72	3.50	15.16	21.49	23.58	6.25	6.00	1.63
2 x 24	1072859	1073475	37000	35.3	2.00	2.62	5.61	2.09	4.19	15.59	23.82	26.36	7.28	6.88	2.00
2-1/2 x 24	1072877	1073493	60000	55.8	2.50	3.06	5.84	2.38	5.62	17.20	25.61	29.09	9.04	7.50	2.25
2-3/4 x 24	1072895	1073518	75000	72.4	2.75	3.69	6.57	2.88	6.12	17.35	26.75	30.75	9.56	8.38	2.75

* Mechanical Galvanized